Documents to be enclosed:

(*1*) Copy of Registration Certificate issued by Competent Authority alongwith copy of the Memorandum of Association and details of aims and objectives of the Organization.

(*2*) A copy of Certificate of Registration issued by The Director of Social Welfare under The Rights of Persons with Disabilities Act, 2016.

(*3*) Quotations from the recognized dealer for purchase of equipments/appliances/books.

(*4*) A copy of the resolution passed by the Managing Committee of the Organization.

(*5*) Audited Statements of Accounts for the last two years.

(*6*) Detail report of the activities undertaken by the Organization.

(7) An Affidavit sworn before the Executive Magistrate/Notary Public stating that financial assistance is not availed/will not be availed from any other Government Department/source for the similar project.

(*8*) A copy of Rent Certificate issued by Public Works Department, Government of Goa, alongwith a copy of Rent agreement of the building utilized for the project. The building to be used for running Braille Library should be available for a period of at least 10 years from the date of application. (Not required if the building is owned by the NGO).

(*9*) Copies of all Permissions/NOC's/Licenses/ Certificates etc., required for setting up of Accessible Library as per the rules of the Government in force.

———

ANNEXURE-II

Illustrative List of Braille Books/Material to be procured for setting up of Accessible Library for Visually Challenged Persons

(*1*) Braille Books in Marathi and English at least 300 numbers on various topics like Literature, Computer Education, Dictionary, Novel, Story Books, Science Fiction, Autobiographies, Government Gazettes in Braille etc.

(*2*) Computers with JAWS/NVDA or any other Screening Reader Software having Word processor, spreadsheet, Internet Surfing, Tech-Vision Software, Distance education features.

(*3*) Book Reading Software such as Dolphin easy reader, KIVO etc.

(*4*) Book Reading Hardware such as HV Pro, Angel Reader, Vachak etc.

(*5*) Smart Phone with external USB/Bluetooth keyboards.

(*6*) KIVO Hardware or any other high definition scanner with compatible English plus Vernacular Optical Character Recognition (O.C.R.) software.

(7) Braille embosser/Picture embosser.

(*8*) Audio books.

(*9*) Braille writing stylus and slates.

(*10*) Braille typewriter or Refreshable Braille Display.

(*11*) Braille playing cards.

(*12*) Mathematics kit/Abacus.

(*13*) Science kit.

(*14*) Tactile Pictures

(*15*) Blank Braille papers

(*16*) Swell line papers

The above list is illustrative only however the Grantee NGO may provide more facilities to the Visual Challenged persons.

———♦♦♦———

Department of Town & Country Planning

———

Notification

21/1/TCP/2020-22/Part/476

In pursuance of regulation 20.9 of the Goa Land Development and Building Construction Regulations, 2010 (hereinafter called as the "said Regulations"), and all other powers enabling it in this behalf, the Government of Goa hereby amends the Government Notification No. 21/1/TCP/2021/Part dated 06-04-2021, published in the Official Gazette, Series I No. 3 dated 15-04-2021 (hereinafter called as the "principal Notification")as follows:—

In the principal Notification,—

(*i*) for clause (*ii*), the following clause shall be substituted, namely:—

"(*ii*) possess the qualification as specified in clause (*14*) or (*52*), as the case may be, of regulation 2 of the said Regulations, and possess at least 10 years experience in the field from the date of registration with the Council of Architecture, New Delhi, in case of Architect and from the date of

registration as Engineer or Structural Engineer under regulation 20 of the said Regulations. They should have valid registration with Council of Architecture or from registering Authority under the said Regulations as stated above.".

(*ii*) in clause (*iii*), for the expression "50 years", the expression "35 years" shall be substituted.

This Notification shall come into force from the date of its publication in the Official Gazette.

By order and in the name of the Governor of Goa.

James Mathew, Chief Town Planner (Admn) & ex officio Joint Secretary (TCP).

Panaji, 31st March, 2022.

———

Notification

21/1/TCP/2020/GLDBCR/489

WHEREAS, the Goa Land Development and Building Construction Regulations, 2010 since its inception had provision for empanelling the Notary Architect and Notary Engineer.

AND WHEREAS, vide Notification No. 21/1/TCP/2019/Steering Committee/1006 dated 13-06-2019, published in the Official Gazette, Series I No. 11, dated 14-06-2019, the principal Regulations pertaining to Notary Architect and Notary Engineer were amended incorporating Third party Certification as Ease of Doing Business.

AND WHEREAS, the Government of Goa has decided to further amend the said regulations pertaining to Notary Architect and Notary Engineer.

Now, therefore, in exercise of the powers conferred by sub-sections (*1*) and (*2*) of section 4 of the Goa (Regulation of Land Development and Building Construction) Act, 2008, the Government of Goa hereby makes the following regulations so as to further amend the Goa Land Development and Building Construction Regulations, 2010, namely:—

1. *Short title and commencement.*— (*1*) These regulations may be called the Goa Land Development and Building Construction (Amendment) Regulations, 2022.

(*2*) They shall come into force on the date of their publication in the Official Gazette.

2. *Amendment of regulation 2.*— In regulation 2 of the Goa Land Development and Building Construction Regulations, 2010 (hereinafter referred to as the "principal Regulations), for clause (*90*), the following clause shall be substituted, namely:—

"(*90*) "Notary Architect or Notary Engineer" means an Architect or an Engineer empanelled, registered and empowered by the designated Chief Town Planner to issue Third Party or self Technical Clearance/Development Permission/Completion Order for low risk buildingand/or compound wall or to issue Third Party or self Certification for low risk buildings and/or compound wall for facilitating issuance of Technical Clearance/Development Permission/ Completion Order by Town and Country Planning Department/Planning and Development Authority for promoting ease of doing business.

Note:— For the purpose of this clause "low risk building" means and includes all buildings in plots formed by way of finally approved sub-division layout and partitioned plot formed by way of finally approved sub-division layout plan approved earlier by Competent authorities for buildings and/or compound wall in plot area upto 500 sq. mts. having maximum built up area of 500 sq. mts. and height of building limited to G+2 storeys including stilt floor. All other buildings shall be considered as high risk buildings;".

3. *Amendment of regulation 20.*— In regulation 20 of the principal Regulations, for sub-regulation 20.9, the following sub-regulation shall be substituted; namely:—

"20.9 Notary Architect or Engineer empanelled, shall be registered by the designated Chief Town Planner to issue Third Party or self Technical Clearance/

Development Permission/Completion Order and Certification towards issuance of Technical Clearance/Development Permission/Completion Order by the Town and Country Planning Department/ Planning and Development Authority, as the case may be, as per rules specified in Annexure-X, 27.X.".

4. *Amendment of Appendices*.— In Appendix-E1 to Appendix-E8 of the principal Regulations, for the expression "for single family dwelling unit in approved sub-divided PLOT or a natural PLOT in Settlement zone of upto 2,000m2 in area with total contiguous Coverage on ground not exceeding an area of 250m2 in Non PDA areas in the State of Goa", wherever it occurs, the expression "for buildings and/or compound wall in plot area upto 500 sq. mts. and height of building limited to G+2 storeys including stilt floor in plots formed by way of finally approved sub-division layout plan approved earlier by competent authorities in both Planning and Development Authority areas/Non Planning and Development Authority areas in the State of Goa" shall be substituted.

5. *Amendment of Annexure X*.— In Annexure – X of the principal Regulations, for the existing Clause 3, the following shall be substituted, namely:—

"(3) Duties and responsibilities of Notary Architect and Notary Engineer:—

(*a*) For issue of Third Party or self Technical Clearance/Development Permission/ Completion Order, the Notary Architect/ Notary Engineer shall,—

(*i*) obtain all documents including certificate of conformity with these Regulations/Affidavits, Structural liability/ Stability Certificate as the case may be; conduct site inspection as may be necessary and remit the processing fee and Infrastructure Tax to the Government treasury.

(*ii*) sign the formats and building plan/ Completion order of low risk buildings for issue of building license by respective Village Panchayat/Municipal Council/ Corporation.

(*iii*) maintain register of applications received towards Technical Clearance/ Development Permission/Completion Order and also retain a set of all the documents for his record and for inspection of the designated officer of the Town and Country Planning Department/Planning and Development Authority.

(*iv*) in case of any complaints and Court cases arising out of the Technical Clearance/Development Permission/ Completion Order, it shall be the responsibility of the Notary Architect or Notary Engineer to defend himself and the Town and Country Planning Department or Planning and Development Authority shall not be responsible/liable in any manner whatsoever.

(*v*) the Town and Country Planning Department or Planning and Development Authority shall not be responsible for any disputes arising between the Notary Architect or Notary Engineer and/or the Architect or Engineer who has prepared the Plan and/or the owner/project proponent.

(*b*) For issue of Third Party or self Certification to enable the Town and Country Planning Department or Planning and Development Authority to issue Technical Clearance/Development Permission/ Completion Order, the Notary Architect or Notary Engineer shall,—

(*i*) to scrutinize the applications received for issue of Third Party or self Certification under these rules and in accordance with the Regulations by conducting site inspection as may be necessary.

(*ii*) sign the formats and building plan of low risk buildings as required under the Regulations by obtaining all documents including certificate of conformity with Regulations, Affidavits, Structural liability/ Stability Certificate, as the case may be; and submit it to the Town and Country Planning Department/Planning and Development Authority, as the case may be.

(*iii*) maintain register of applications received for Third Party or self Certification towards issue of Technical Clearance/ Development Permission/Completion Order and also retain a set of all documents for his record and for inspection of the designated officer of the Town and Country Planning Department/Planning and Development Authority, as the case may be.

(*iv*) in case of any complaints and Court cases arising out of the Technical Clearance/Development Permission/ Completion Order, it shall be the responsibility of Notary Architect or Notary Engineer to defend himself and the Town and Country Planning Department or Planning and Development Authority shall not be responsible/liable in any manner whatsoever.

(*v*) the Town and Country Planning Department or Planning and Development Authority shall not be responsible for any disputes arising between the Notary Architect or Notary Engineer and/or the Architect or Engineer who has prepared the Plan and/or the owner/project proponent.".

By order and in the name of the Governor of Goa.

James Mathew, Chief Town Planner (Admn) & ex officio Joint Secretary (TCP).

Panaji, 1st April, 2022.

———♦♦♦———

Department of Women & Child Development

Directorate of Women & Child Development

——

Notification

2-716/2021/DWCD/ICDS/Budget Speech/ RBS/9561

Read 1) No. 2-98-2008/DW&CD/ICDS(3)/4234 dated 30-04-2013.

2) No. 2-98-2008/DW&CD/ICDS(2) dated 18-08-2011.

3) No. 2-98-2008/DW&CD/ICDS(2)/843 dated 25-03-2010.

4) No. 2-98-2008/DW&CD/ICDS(2)/889 dated 06-08-2009.

In terms of powers conferred vide Clause 17 of "Retirement Benefit Scheme for Anganwadi Workers (AWW)/Anganwadi Helpers (AWH)" notified in the Official Gazette, Series I, No. 20 dated 18-08-2011, the Government hereby amends the said Scheme as hereunder:

1. *Name of Scheme*.— The scheme may be called as Retirement Benefit Scheme for Anganwadi Workers/Anganwadi Helpers who are honorary workers under the Anganwadi Services Scheme.

2. *Commencement*.— It shall come into force from date of publication in the Official Gazette.

3. *Objectives*.— The objective of the Scheme is to determine retirement age and to provide lump sum financial assistance on such retirement in order to help and enable the AWW/AWH to take care of their requirements after their retirement.

4. *Implementation*.— The Scheme shall be implemented by the Department of Women and Child Development.

5. *Definition*.— (*a*) 'CDPO', means Child Development Project Officer of the respective block under the Anganwadi Services Scheme.

(*b*) 'Member' - means Anganwadi Worker/ /Helper engaged and working under the Anganwadi Services Scheme.

(*c*) 'Department', means Directorate of Women and Child Development.

(*d*) 'Director', means the Director of Women and Child Development, Government of Goa.

6. All the AWWs & AWHs under Anganwadi Services Scheme shall be eligible to be the members of the Scheme.

7. *Age of retirement*.— The age of retirement of the AWWs & AWHs shall stand to be 60 years. The AWWs & AWHs who attain the age of retirement thereafter shall stand retired on the last day of the month in which she attain the age of 60 years.

8. The financial assistance under the Scheme shall be as under:

Reg. No. RNP/GOA/32/2021-2023

RNI No. GOAENG/2002/6410

Panaji, 9th June, 2022 (Jyaistha 19, 1944)

SERIES I No. 10

OFFICIAL GAZETTE

GOVERNMENT OF GOA

PUBLISHED BY AUTHORITY

NOTE

There is an Extraordinary issue to the Official Gazette, Series I No. 9 dated 2-6-2022, namely:—

(1) Extraordinary dated 8-6-2022 from pages 359 to 360, Department of Finance, Notifications regarding GST

INDEX

	Department	Order/Corrigendum	Subject	Pages
	1	*2*	*3*	*4*
1.	Printing and Stationery	Ord.- 3/172/2020-DPS/294	Revision of rates/fees of e-mail subscription of O. G. and Goa Vacancy & Tender Bulletin	361
2.	Town & Country Planning	Corri.- 21/1/TCP/2022/GLDBCR/ /840	—	361

GOVERNMENT OF GOA

Department of Printing & Stationery

Government Printing Press

—

Order

3/172/2020-DPS/294

The Administrative approval of the Government is hereby conveyed for revision of rates/fees of E-mail Subscription of Official Gazettes and Goa Vacancy & Tender Bulletin with immediate effect as detailed below.

1) E-mail Subscriptions rates per year of Official Gazette (All 3 Series) is revised from Rs. 200/- to Rs. 250/-.

2) E-mail Subscriptions rates of Goa Vacancy & Tender Bulletin for Year is revised from Rs. 250/- to Rs. 300/-.

By order and in the name of the Governor of Goa.

Rajendra D. Mirajkar, Director & ex officio Additional Secretary (Printing & Stationery).

Panaji, 08th June, 2022.

———♦♦♦———

Department of Town & Country Planning

Office of the Chief Town Planner (Adm.)

––

Corrigendum

21/1/TCP/2022/GLDBCR/840

In the Government Notification No. 21/1/ /TCP/2020/GLDBCR/489 dated 01-04-2022 of

the Department of Town and Country Planning, published in the Official Gazette, Series I No. 1 dated 07-04-2022, on page No. 25, in regulation 5 of the Goa Land Development and Building Construction (Amendment) Regulations, 2022, the expression "remit the processing fee and Infrastructure Tax" shall be read as "remit the Infrastructure Tax".

By order and in the name of the Governor of Goa.

James Mathew, Chief Town Planner (Administration) & ex officio Jt. Secretary (TCP).

Panaji, 31st May, 2022.

www.goaprintingpress.gov.in

Printed and Published by the Director, Printing & Stationery,
Government Printing Press,
Mahatma Gandhi Road, Panaji-Goa 403 001.

PRICE – Rs. 2.00

PRINTED AT THE GOVERNMENT PRINTING PRESS, PANAJI-GOA— 70/150—6/2022.

Department of Town and Country Planning
Office of the Chief Town Planner (Admin.)

Corrigendum

No. 21/1/TCP/2022/GLDBLCR/1880

Read: 1. Government Notification No. 21/1/TCP/ /2020/GLDBCR/489 dated 01-04-2022, published in the Official Gazette, Series I No. 1 dated 07-04-2022.

2. Corrigendum No. 21/1/TCP/2022/ /GLDBCR/840 dated 31-05-2022, published in the Official Gazette, Series I No. 10 dated 09-06-2022.

In the Government Notification No. 21/1/TCP/ /2020/GLDBCR/489 dated 01-04-2022 of the Department of Town and Country Planning, published in the Official Gazette, Series I No. 1 dated 07-04-2022, on page No. 25, in regulation 5 of the Goa Land Development and Building Construction (Amendment) Regulations, 2022, the expression "remit the Infrastructure Tax to the Government treasury" shall be read as "remit the tax on infrastructure as levied and paid under Section 3 of the Goa Tax on Infrastructure Act, 2009 (Goa Act 20 of 2009) and the development charge levied and paid under Section 100 of the Goa Town and Country Planning Act, 1974 (Act No. 21 of 1975) to the Government treasury and the concerned Planning and Development Authority, respectively.".

By order and in the name of the Governor of Goa.

James Mathew, Chief Town Planner (Admn.) & ex officio Joint Secretary.

Panaji, 22nd November, 2022.

———◆◆◆———

Department of Urban Development
Directorate of Municipal Administration

Order

No. 1/03/DMA/ADMN/RTI/3475

Read: 1. Order No. 1/03/DMA/ADMN/RTI/4391 dated 11-12-2020 (Mapusa Mun. Council).

2. Order No. 1/03/DMA/ADMN/RTI/4945 dated 24-03-2022 (Margao Mun. Council).

3. Order No. 1/03/DMA/ADMN/RTI/4392 dated 11-12-2020 (Mormugao Mun. Council).

In partial modification to the above referred Orders, the Government has approved the appointment of the following officials of the Mapusa, Margao and Mormugao Municipal Councils in the State of Goa under the Right to Information Act, 2005 to act as Official under sub-section 2 of Section 5 of the Right to Information Act, 2005.

Sr. No.	Name of the Council	Rank of the Official	Designation
1	2	3	4
1.	Mapusa Municipal Council	Head Clerk	Public Information Officer.
2.	Margao Municipal Council	Head Clerk	Public Information Officer.
3.	Mormugao Municipal Council	Head Clerk	Public Information Officer.

The Public Information Officers are responsible for maintaining and updating all required information and also receiving and disposing off application under Right to Information Act, 2005 within the prescribed time limit.

Gurudas P. Pilarnekar, Director (Urban Development).

Panaji, 18th November, 2022.

Notification

No. LSG/MUN/3182/68-C/PW&UD/3416

Read: Government Notification No. LSG/MUN/ /3182/68-C/PW&UD/1342 dated 27-08-2020.

In exercise of the powers conferred by sub--section (3) of Section 71 of the Goa Municipalities Act, 1968 (Act 7 of 1969) (hereinafter called the 'said Act'), and in supersession of the Government Notification No. LSG/MUN/3182/68-C/PW&UD/1342 dated 27-08-2020, published in the Official Gazette, Series II No. 51 dated 18-03-2021, the Government of Goa hereby appoints Shri Ganesh Barve as the Additional Director of Urban Development, for the purposes of the said Act, with effect from 22-08-2022.

He shall have jurisdiction over the whole of the State of Goa and shall exercise all the powers of the Director of Urban Development during the absence of the Director.

By order and in the name of the Governor of Goa.

Ramesh Verma, IAS, Secretary (Urban Development).

Panaji, 15th November, 2022.

Reg. No. RNP/GOA/32/2021-2023

RNI No. GOAENG/2002/6410

Panaji, 9th August, 2023 (Sravana 18, 1945)

SERIES I No. 18

OFFICIAL GAZETTE

GOVERNMENT OF GOA

PUBLISHED BY AUTHORITY

EXTRAORDINARY No. 2

GOVERNMENT OF GOA

Department of Town & Country Planning

Notification

21/1/TCP/2021-23/Steering Committee/105

Whereas, the draft regulations, namely, the Goa Land Development and Building Construction (Amendment) Regulations, 2021 which the Government of Goa proposed to make in exercise of the powers conferred by sub-sections (*1*) and (*2*) of section 4 of the Goa (Regulation of Land Development and Building Construction) Act, 2008 (Goa Act 6 of 2008) (hereinafter referred to as the "said Act") so as to further amend the Goa Land Development and Building Construction Regulations, 2010, were pre-published as required by section 5 of the said Act vide the Government Notification No. 21/1/TCP(A)/ /2021/Steering Committee/993 dated 22-06-2021, published in the Official Gazette, Series I No. 14 dated 01-07-2021, inviting objections and suggestions from all persons likely to be affected thereby within 30 days from the date of publication of the said Notification in the Official Gazette;

And whereas, the said Official Gazette was made available to the public on 01-07-2021;

And whereas, the objections and suggestions received from the public on the said draft Regulations have been considered by the Sub-Committee appointed under sub-section (*2*) of section 6 of the said Act and submitted its report to the Steering Committee constituted under sub-section (*1*) of section 6 of the said Act vide the Government Notification No. 21/1/TCP/2018/SC/481 dated 22-02-2018, published in the Official Gazette, Series II No. 48 dated 01-03-2018;

And whereas, the Steering Committee after considering the report of the Sub-Committee submitted its report together with recommendations to the Government;

And whereas, the Government has considered the report and recommendations of the Steering Committee and approved the same and directed the Chief Town Planner (Land Use) to notify the Amendment Regulations in the Official Gazette.

Now, therefore, in exercise of the powers conferred by sub-sections (*1*) and (*2*) of section 4 of the Goa (Regulation of Land Development and Building Construction) Act, 2008 (Goa Act 6 of 2008) and all other powers enabling it in this behalf, the Government of Goa hereby makes the following regulations so as to further amend the Goa Land Development and Building Construction Regulations, 2010, namely:—

1. *Short title and commencement.*— (*1*) These regulations may be called the Goa Land Development and Building Construction (Amendment) Regulations, 2023.

(*2*) They shall come into force on the date of their publication in the Official Gazette.

2. *Amendment of regulation 2.*— In regulation 2 of the Goa Land Development and Building Construction Regulations, 2010 (hereinafter referred to as the "principal Regulations"),—

(*i*) in clause (*17*), for the expression "Fire and Life Safety as per National Building Code 2005", the words "Part 4 of the National Building Code of India 2016" shall be substituted;

(*ii*) in clause (*20A*), for sub-clause (*h*), the following sub-clause shall be substituted, namely:—

"(*h*) "High Rise Building" means a building 15 meters or above in height (irrespective of its occupancy);";

(*iii*) for clause (*66*), the following clause shall be substituted, namely:—

"(*66*) "Fire resistant materials" means and includes those materials serving appropriate fire resistance rating as per the relevant provisions of National Building Code of India, 2016 as amended from time to time and relevant Bureau of Indian Standards (BIS) Codes.";

(*iv*) clause (*77*) *shall* be omitted;

(*v*) after clause (*86*), the following clause shall be inserted, namely:—

"(*86A*) "National Building Code of India, 2016" means the National Building Code of India, 2016 as amended from time to time;".

3. *Amendment of regulation 3.6.2.*— In regulation 3.6.2 of the principal Regulations, for clause (*c*), the following clause shall be substituted, namely:—

"(*c*) In case of the buildings specified in regulation 15.2.1, No Objection Certificate from the Director of Fire and Emergency Services shall be obtained by the owner before applying for Construction License to the Local Authority.".

4. *Amendment of regulation 3.11.*— In regulation 3.11 of the principal Regulations, for clause (*b*), the following clause shall be substituted, namely:—

"(*b*) Clearance from the Directorate of Fire and Emergency Services before issue of Occupancy Certificate shall be required for the buildings specified in regulation 15.2.1.".

5. *Amendment of regulation 6A.5.*— In regulation 6A.5 of the principal Regulations, for clause (*2*), the following clause shall be substituted, namely.—

"(*2*) In case of building on stilts or building with basements, the height of the buildings shall be measured from the top of the stilts/basement. However, if the building height is 15 meters or more from the ground. Fire and Life Safety Regulations shall be applicable.".

6. *Amendment of regulation 13.10.*— In regulation 13.10, of the principal Regulations, in clause (*b*), item (*iii*) shall be omitted.

7. *Amendment of regulation 13.11.*— In regulation 13.11, of the principal Regulations, for clause *(c)*, the following clause shall be substituted, namely.—

"(*c*) The requirements for installation of Lifts, Escalators and Moving Walks shall be as per provisions of part 8 of the National Building Code of India 2016.".

8. *Substitution of regulation 15.*— For regulation 15 of the principal Regulations, the following regulation shall be substituted, namely:—

"15. *Fire and life safety requirements:*—

15.1.1. General Provisions:—

Buildings specified in regulation 15.2.1 shall be planned, designed and constructed to ensure adequate fire safety of the buildings, property and inhabitants and this shall be carried out in accordance with the provisions of Part 4 of the National Building Code of India, 2016 except clauses 3.2 and 3.4.4 thereof and any other provisions of the fire safety made in these regulations. Fire Fighting requirement arrangement and installations required in the

building shall also be as per the provisions of the Part 4 of the National Building Code of India, 2016. All the technical terms shall have the meaning as defined in Part 4 of the National Building Code of India, 2016 except the terms which are defined in these regulations.

15.1.2. Notwithstanding anything contained in regulation 4.2. (*g*) and 4.4.2 for high rise buildings, the following provisions of means of access and open spaces (set backs) shall be ensured:

(*a*) The width of the main street on which the building abuts shall not be less than 10 meters;

(*b*) The approach to the building and open spaces on all its sides shall be not less than 6 meters in width, the layout for the same shall be done to the satisfaction of the Directorate of Fire and Emergency Services and the open space shall be of hard surface capable of taking the mass of fire engine weighing up to 45 tonnes. A turning radius of atleast 9 meters shall be provided for movement of fire service vehicles. The said open space shall be kept free of obstructions and shall be motorable, further no projections shall be allowed in the said open spaces. In case of buildings with no side set backs or setbacks with 1.5 meters or less, a clear height of atleast 5 meters shall be maintained below the bottom of lowest structural member and the open space as aforesaid shall be made available through the building on all sides for movement of fire service vehicles.

(*c*) The main entrance of the plot shall be of adequate width to allow easy access to the fire service vehicles and in no case it shall measure less than 6 meters. The entrance gate shall fold back against the compound wall of the premises, thus leaving the exterior access way within the plot free for movement of fire service vehicle. If the main entrance at the boundary wall is built over, the minimum clearance shall be 5 meters.

15.2. *Requirement for Fire Dept Clearance:*—

15.2.1. The NOC from Director, Directorate of Fire and Emergency Services shall be obtained by the Owner/Developer before applying for construction license to the local authority and also before applying for occupancy certificate to local authority in case of,—

(a) highrise buildings; and

(b) special building such as (*i*) hotel, educational, institutional, business, mercantile, industrial, storage, hazardous and mixed occupancies, where any of these buildings have floor area more than 500 square meter on any one or more floors;

(ii) educational building having height of 9 meters or above;

(iii) institutional building having height of 9 meters or above;

(iv) assembly building;

(v) building, having area more than 300 square meter of incidental assembly occupancy on any floor; and

(vi) building with two basements or more, or with one basement of area more than 500 square meters.

15.2.2. Above buildings shall be as per Part 4 of the National Building Code of India, 2016.

15.2.3. Any alterations/modifications/ /renovation for floor area exceeding 500 square meters for all high rise buildings shall also require No objection certificate from Director, Directorate of Fire and Emergency Services (DFES) before applying for license to the local authority

15.3. Records, documents, application forms, fees, fire drills and appointment of fire officer at the premises, if any, shall be as specified by the Directorate of Fire and Emergency Services for issue of Clearance (NOC).

15.4.*Classification of Buildings Based on Occupancy:*

15.4.1. All buildings, whether existing or hereafter erected shall be classified according to use or the character of occupancies in the following groups:

Group	**Occupancy**
Group A	Residential
Group B	Educational

Group C	Institutional
Group D	Assembly
Group E	Business
Group F	Mercantile
Group G	Industrial
Group H	Storage
Group J	Hazardous

15.4.2. The above classification of buildings is for the purpose of Fire and Life Safety and the same is as per clause 3.1.1 of Part 4, of the National Building Code of India, 2016. The details of each occupancy and example of buildings in each group are as per clause 3.1.2 to 3.1.10 and Mixed occupancy if any shall be as per clause 3.1.1.2 and 3.1.11 of Part 4 of the National Building Code of India, 2016.

15.5. *Fire Resistance of various Types of Construction/Building Components:—*

The minimum fire resistance ratings of structural and non-structural members for various types of construction shall be as specified in clause 3.3, of Part 4 of the National Building Code of India, 2016 and to the satisfaction of the Directorate of Fire and Emergency Services.

15.6. *Glazing:—*

The glazing shall be in accordance with provisions contained in section 8 of Part 6 of the National Building Code of India, 2016. The entire glazing assembly shall be rated to the type of construction as given in Table I as specified in clause 3.4.1 of Part 4 of the National Building Code of India, 2016. The use of glass shall not be permitted for enclosures of exits and exit passageway.

15.7. *Glass facade:—*

Glass facade shall be in accordance with clause 3.4.10.2 of Part 4 of the National Building Code of India, 2016.

15.8. *Occupant Load:—*

15.8.1. For determining the exits required, the number of persons within any floor area or the occupant load shall be based on the actual number of occupants declared, but in no case less than that specified in Table XXI. The occupant load of a mezzanine floor discharging to a floor below shall be added to that floor occupancy and the capacity of the exits shall be designed for the total occupancy load thus established.

15.8.2. The occupant load of each storey considered individually shall be required to be used in computing the number of means of egress at each storey, provided that the required number of means of egress is not decreased in the direction of egress travel.

15.8.3. The capacity of any open mezzanine/balcony shall be added to the capacity of the floor below for the purpose of determining exit capacity.

15.8.4. The assembly occupancies and call centres shall be required to display, limiting occupant load details positioned in a conspicuous place near the entrance of each of such respective occupancy to avoid possible overcrowding and overloading to the satisfaction of the Directorate of Fire and Emergency Services. The display shall preferably be engraved on a metal plate of not less than 300 mm X 200 mm, with letters of height and width not less than 50 mm, with detail of occupancy, area and occupancy load (see Sketch No. 10.).

TABLE-XXI

Occupant Load

Sr. No.	Group of Occupancy	Occupant Load Factor (m2/person) (See Note 1)
1	Group A: Residential	12.50
2	Group B: Educational	4.00
3	Group C: Institutional (see Note 2)	
	a) Indoor patients area	15.00
	b) Outdoor patients area	10.00
4	Group D: Assembly:	
	a) Concentrated use without fixed seating	0.65
	b) Less Concentrated use without fixed seating (see Note 3)	1.40
	c) Fixed Seating	See Note 4

	d) Dining areas and restaurants with seating and table	1.80
5	Group E: Business	10.00
6	Group F: Mercantile	
	a) Street floor and sales basement	3.00
	b) Upper sale floors	6.00
	c) Storage/warehouse and the like	20.00
6	Group G: Industrial	10.00
7	Group H: Storage (see Note 5)	30.00
8	Group J: Hazardous	10.00

Notes:

(*1*) Gross area shall be the area of the floor within the inside perimeter of the outside walls of the floor of the building under consideration with no deductions for corridors and passage-ways, stairs, closets, thickness of interior walls, columns, lifts and building shafts or other features. However the proponent may consider the area including the outside wall thickness, if he so desires. All factors expressed are in gross area unless marked net.

(*2*) Occupant load in dormitory portions of homes for the aged, orphanages, insane asylums, etc, where sleeping accommodation is provided, shall be calculated at not less than 7.5 m2 gross floor area per person.

(*3*) These shall include gymnasium, table tennis room, billiard room and other gaming rooms, library, swimming pool and like.

(*4*) In case of assembly occupancy having fixed seats, the occupant load shall be determined by multiplying the number of seats by 1.2.

(*5*) Car parking areas under occupancy other than storage shall also be 30 square meter per person.

15.9. *Exit Requirements:*—

15.9.1. Every building meant for human occupancy shall be provided with exits sufficient to permit safe escape of occupant, in case of fire or other emergency as per clauses 4.2 to 4.4.2.5 of Part 4 of the National Building Code of India, 2016/this part of regulations.

15.9.2. *General Requirements:*—

The following general requirements shall apply to exits.—

(*a*) Unless otherwise specified, lifts, escalators, moving walks and revolving doors shall not be considered as exits and shall not constitute any part of the required exit.

(*b*) Every exit, exit passageway and exit discharge shall be continuously maintained free of all obstructions or impediments to full use in the case of fire or other emergency.

(*c*) Every building having human occupancy shall be provided with exits sufficient to permit safe egress of occupants in case of fire or other emergency.

(*d*) In every building or structure, exits shall comply with the minimum requirements of this Part of regulations, except those not accessible for general public use.

(*e*) No building shall be so altered as to reduce the number, width or protection of exits to less than that required.

(*f*) For non-naturally ventilated areas, fire doors with 120 minutes fire resistance rating shall be provided and particularly at the entrance to lift lobby and stair well where a 'funnel or flue effect' may be created, inducing an upward spread of fire, to prevent spread of fire and smoke.

(*g*) Exits shall be so arranged that they may be reached without passing through another occupied unit/passage in others control, if they pose challenge or restriction in means of egress.

(*h*) Doors in exits shall open in the direction of exit. In case of Group D Assembly Buildings and Group C Institutional Buildings (Subdivision C-1 Hospitals and sanatoria), exit door shall not open immediately upon a flight of stair and all such entries to the stair shall be through a landing, so that such doors do not impede movement of people descending from a higher floor when fully opened (see Sketch No. 8 A). While for other occupancies, such doors shall not reduce the pathway in the landing by more than half the width of such staircase (see Sketch No. 8 B). Overhead or sliding doors shall not be installed.

(*i*) At least half of the required exit stairs from upper floors (rounded to the next higher number) shall discharge directly to the exterior or through exit passageways.

(*j*) Unless otherwise specified, all the exits and exit passageways to exit discharge shall have a clear ceiling height of at least 2.4 meter. However, the height of exit door shall be at least 2.0 meter (see Sketch No. 9.)

(*k*) Where changes in elevation of more than 300 mm are encountered in the exits, ramps or sloped surfaces shall be used with handrails and floor finish materials that contrast with the adjacent finish materials.

(*l*) The capacity of the means of egress required from any storey of the building shall not be reduced along the path of egress travel until arrival to the exit discharge.

(*m*) The lifts, escalators, moving walks, turnstiles and revolving doors shall not be considered in determining the required capacity of means of egress for the individual floors or the building.

(*n*) Turnstiles or similar devices that restrict travel to one direction or that are used to restrict unauthorized entry shall not be so placed as to obstruct any required means of egress. Alternative door openings of required exit width shall be available within 3 meter of such devices, if installed.

(*o*) Suitable means shall be provided so that all access controlled exit doors, turnstiles, boom barriers and other such exits shall automatically operate to open mode during emergencies like fire, smoke, acts of terrorism, etc, so that people can safely and quickly egress into safe areas outside. If required, a master controlling device may be installed at a strategic location to achieve this.

(*p*) Penetrations into and openings through an exit are prohibited except those necessary like for the fire protection piping, ducts for pressurization and similar life safety services. Such openings as well as vertical passage of shaft through floors shall be protected by passive systems.

(*q*) Walking surfaces in exit access shall comply with the following requirements for smooth exit:

(*i*) Walking surfaces shall be nominally levelled.

(*ii*) The slope of walking surface in the direction of travel shall not exceed 1 in 20 unless the ramp requirements are met.

(*iii*) Slope perpendicular to the direction of travel shall not exceed 1 in 48.

(*iv*) Walking surfaces shall be slip resistant along the entire path of travel.

15.9.3. *Number of Exits:*— The minimum required number of exits in a building shall be determined based on occupant load (see Table XXI as specified in regulation 15.8.1) and width required per person (see Table XXII as specified in regulation 15.9.5) as appropriate to the type of exit for respective occupancies, subject to complying with maximum travel distance requirement (see Table XXIII as specified in regulation 15.9.6).

15.9.4. Arrangement of Exits:—

(*a*) Exits shall be so located that the travel distance on the floor shall not exceed the distance given in Table XXIII as specified in regulation 15.9.6.

(*b*) Travel distance shall be measured from the most remote point within a storey or a mezzanine floor along the natural and un-obstructed path of horizontal or vertical egress travel to the door to an exit.

(*c*) The dead end corridor length in exit access shall not exceed 6 meters for educational, institutional and assembly occupancies. For other occupancies, the same shall be 15 meter (see Sketch No. 11.).

(*d*) Exits shall be placed as remote from each other as possible and shall be arranged to provide direct access in separate directions from any point in the area served.

15.9.5. Capacity of Exits:—

(*a*) Exit capacity is the number of people that can pass through a stairway, level components (door and corridor) and ramps. The total capacity of all the respective means of egress serving a floor shall be sufficient to allow egress of the entire population of the floor.

(*b*) The unit of exit width, used to measure the capacity if any exit, shall be 500 mm. A clear width of 250 mm shall be counted as an additional half unit. Clear width less than 250 mm shall not be counted for exit width.

(*c*) Width per person for stairways, level components and ramps shall be determined using the capacity factors in accordance with Table XXII.

Note: If an exit doorway measures 1,000 mm in clear width, it would be defined as providing exit capacity for 1,000/6.5 occupants, that is, 153 persons (say 150 persons) and number of such exit doorways can then be calculated depending on the occupant load.

TABLE-XXII

Capacity Factors

Sr. No.	Occupancy Group	Width per Person mm	
		Stairways	Level Components and Ramps
1	Residential (Group A)	10	6.5
2	Educational (Group B)		
3	Institutional (Group C)	15	13
4	Assembly (Group D)		
5	Business (Group E)		
6	Mercantile (Group F)	10	6.5
7	Industrial (Group G)		
8	Storage (Group H)		
9	Hazardous (Group J)	18	10

(*d*) When calculating stairways, level components and ramps and other exit means, the capacity of the entire system shall have to be based upon the minimum capacity available from any part of the system. The corridor, if so provided shall also to be planned with consideration of exit access adequacy for the number of occupants. Further, the situation of doors opening to an exit stairway shall be considered. If the stairway provides an exit capacity of 150 persons, and the doors leading into the stairway provide an exit capacity of 153 persons, the overall exit system would be considered to provide the minimum exit capacity of only 150 persons afforded by the stairway. The exit planning will be limited by the most restrictive exit calculation under the means of egress.

(*e*) In the procedures for determining required egress capacity, the number of required means of egress is based on a floor-by-floor consideration, rather than the accumulation of the occupancy loads of all the floors. However, the number of means of egress cannot decrease as an occupant proceeds along the egress path.

15.9.6. Types of Exit access and exits:— Various types of exit access and exits are doorways, corridors and passageways, horizontal exits, internal staircases, exit passageways, external staircases and ramps.

TABLE-XXIII

Travel Distance (Based on Occupancy and Construction Type)

Sl. No.	Occupancy Group	Maximum Travel Distance (m)	
		Types 1 and 2	Types 3 and 4
1	Residential (Group A)	30.00	22.50
2	Educational (Group B)	30.00	22.50
3	Institutional (Group C)	30.00	22.50
4	Assembly (Group D)	30.00	30.00
5	Business (Group E)	30.00	30.00
6	Mercantile (Group F)	30.00	30.00
7	Industrial (Group G)		
	G-1, G-2	45.00	See Note c
	G-3	22.50	
8	Storage (Group H)	30.00	
9	Hazardous (Group J)	22.50	

Notes: (*a*) For fully sprinklered building, the travel distance may be increased by 50 percent of the values specified.

(*b*) Ramp shall not be counted as an exit in case of basements below the first basement in car parking.

(*c*) Construction of Type 3 or Type 4 is not permitted.

15.9.7. *Doorways:*—

(*a*) Every exit doorway shall open into an enclosed stairway or a horizontal exit of a corridor or passageway providing continuous and protected means of egress (see Sketch No. 12. on unaccepted arrangement of doors in a stair).

(*b*) No exit doorway shall be less than 1,000 mm in width except assembly buildings, where door width shall be not less than 2,000 mm (see Sketch No. 13.). Doorways shall not be less than 2,000 mm in height (Doorway for bathroom, water closet etc. shall not be less than 750mm in width. However in case of disabled friendly, the door widths in case of toilets shall be as specified in Rights of Persons with Disabilities Rules, 2017 as amended from time to time, and for other uses they shall be 1000mm or as per Rights of persons with Disabilities Rules, 2017 whichever is higher).

(*c*) Exit doorways shall be operable from the side which they serve, without the use of a key.

(*d*) Mirrors shall not be placed on exit doors and in exits to avoid confusion regarding the direction of exit.

(*e*) Revolving doors can be accepted as a component in a means of egress where the following requirements are fully complied with, namely:—

(*i*) Doors shall be capable of collapsing to a book fold position with parallel egress paths, of width not less than 1,000 mm.

(*ii*) Doors shall not be located within 3 meters of the foot or top of stairs or escalators. A dispersal area shall be provided between the stairs or escalators and the doors.

(*iii*) Each revolving door shall be provided with a hinged door in the same wall within 3 meters thereof, with same exiting capacity.

(*iv*) Each revolving door shall be considered as capable of exiting only 50 persons.

(*f*) All fire rated doors and assembly shall be provided with certificate and labels prominently indicating the manufacturer's identification, door details covering door type, serial/batch number, month and year of manufacture, fire resistance rating, etc. The doors and assembly shall be certified with all prescribed hardware such as hinges, locks, panic bars, door closer and door viewers.

(*g*) Access controlled doors – Access controlled doors and electromagnetic doors shall meet the following requirements, namely:—

(*i*) Doors shall have fire rating as per the requirements at the location of installation.

(*ii*) Activation of the building automatic sprinkler or fire detection system, if provided, shall automatically unlock the doors in the direction of egress, and the doors shall remain unlocked until the automatic sprinkler system or fire-alarm system has been manually reset.

(*iii*) Loss of power to the part of the access control system that locks the doors shall automatically unlock the doors in the direction of egress.

(*iv*) A manual release device shall be provided in the readily accessible vicinity of the egress door with a signage 'PUSH TO EXIT' and when the same is operated, it shall result in direct interruption of power to the lock, independent of the access control system electronics.

(*h*) Turnstiles– Turnstiles or similar devices that restrict travel to one direction

or are used to collect fares or admission charges shall not be placed so as to obstruct any required means of egress unless door openings of required width are available within 3 meters thereof and they shall be disengaged through automatic or manual intervention to allow egress in the direction of exit.

(*i*) Doors in folding partition shall not be treated as approved means of egress.

15.9.8. *Corridors and passage ways:*—

(*a*) Corridors and passageways shall be of width not less than the calculated aggregate width of exit doorways leading from them in the direction of travel to the exit (see table XXII and table XXIII as specified in regulation 15.9.5 and 15.9.6 respectively.)

(*b*) In the case of buildings where there is a central corridor, which is part of exit access, the doors of rooms (except for rooms having assembly occupancy) shall open inwards to permit smooth flow of traffic in the corridor.

15.9.9. *Staircases:*—

(*I*) *General:*

(*A*) The requirements of number of staircases shall supplement the requirement of different occupancies as per clause 6.1 to 6.9 of Part 4 of the National Building Code of India, 2016.

(*B*) All buildings, as specified in regulation 15.2.1 shall have a minimum of two staircases. The actual number of staircases shall comply with the requirement of 15.9.3.

(*C*) All exit staircases shall discharge, at the level of exit discharge, to the exit discharge, either,—

(*i*) directly, or

(*ii*) through an exit passageway, or

(*iii*) through a large lobby.

(*D*) At least 50 percent of the staircases shall discharge as per (*i*) and/or (*ii*) above.

(*E*) The minimum width of tread without nosing shall be 250 mm for staircase of residential buildings. This shall be minimum 300 mm for assembly, hotels, educational, institutional, business and other buildings. The treads shall be constructed and maintained in a manner to prevent slipping. The maximum height of riser shall be 150 mm.

(*F*) The number of risers shall be limited to 12 per flight. The staircases may be internal staircases or external staircases.

(*G*) Only enclosed staircase including its doorof required fire resistance and rating shall be considered for the purpose of this part of regulations (and shall have details as per regulation 15.9.7 (f).

(II) *Internal Staircases:* The internal staircases may be constructed with an external wall, or otherwise, and shall comply with the following requirements, namely:—

(*a*) Internal stairs shall be constructed of non-combustible materials throughout, and shall have fire resistant rating of minimum 120 minutes.

(*b*) A staircase shall not be arranged round a lift shaft.

(*c*) Exits shall not be used as a portion of a supply, return or exhaust air system serving adjoining areas. Any opening(s) shall not be permitted in walls or in doors, separating exits from adjoining areas.

(*d*) No flue chimney, electromechanical equipment, air conditioning units, gas piping or electrical panels shall be allowed in the stairway.

(*e*) Notwithstanding the detailed provision for exits in accordance with Regulations 15.8 and 15.9. The following minimum width shall be provided for staircases for respective occupancies:

(i) Residential (A-2): 1.00 meters

(ii) Residential (A-1, A-3 and A-4): 1.25 meters

(iii) Residential Hotel (A-5 and A-6): 1.50 meters

(iv) Assembly: 2.00 meters

Note: The width of stairs may be accepted to be 1.50 meter in case of assembly occupancy having less than 150 persons.

(*v*) Educational: 1.50 meters

(*vi)* Institutional: 2.00 meters

(*vii*) All other occupancies: 1.50 meters.

(*f*) A handrail shall be provided on one side of the staircase of width less than 1,500 mm, and on both sides of the staircase of width 1,500 mm and more. The projection of handrail(s) in the staircase width shall not be more than 115 mm.

(*g*) Handrails may project inside the measured width by not more than 90 mm.

(*h*) The design of staircase shall also take into account,—

(*i*) The minimum headroom in a passage under the landing of a staircase and under the staircase shall be 2.2 meters.

(*ii*) Access to exit staircase shall be through a fire door of a minimum 120 minutes fire resistance rating.

(*iii*) Openings if any shall have a fire rating of atleast 120 minutes. The staircase shall be pressurized/Naturally ventilated or cross ventilated as per provisions of Table 6 of clause 4.4.2.5. of Part 4 of the National Building Code of India, 2016. For buildings having height more than 30 meters they shall have cross ventilation (through opposite/adjacent walls or the same shall be ventilated through the corridor) or pressurized.

(*iv*) No living space, store or other fire risk shall open directly into staircase.

(*v*) The exit (including staircases) shall be continuous from refuge floors or terrace level, as applicable, to the level of exit discharge.

(*vi*) No electrical shafts/air conditioning ducts or gas pipes, etc, shall pass through or open in the staircases.

(*vii*) Lifts shall not open in staircase.

(*viii*) No combustible material shall be used for decoration/wall paneling in the staircase.

(*ix*) Beams/columns and other building features shall not reduce the head room/ width of the staircase.

(*x*) The floor indication board, indicating the location/designated number of staircase, respective floor number and direction to exit discharge shall be placed inside the staircase, on the wall nearest to the fire door. It shall be of size not less than 300 mm x 200 mm (see Sketch No. 14.).

(*xi*) Individual floors shall be prominently indicated on the wall outside the staircase and facing it.

(*xii*) All staircases shall terminate at the level of exit discharge. The access to the basement shall be by a separate staircase. However, in case of separation of stairs leading from ground (exit discharge) to the upper floors and stairs leading to the basement by fire protection wall and both the stair flights are accessible by separate entries, then access to the basement need not be by a separate staircase.

(*xiii*) Scissors type staircases shall not be treated as part of exit.

(*III*) *Curved Stairs:*—

Curved stairs shall not be treated as part means of egress. However, these may be used as part of exit access provided the depth of tread is not less than 280 mm at a point 350 mm from the narrower end of the tread and the smallest radius is not less than twice the stair width.

(*IV*) *External Staircases.*— The external staircases are the staircases provided on the external wall/façade, which shall comply with the following requirements, namely:—

(*a*) External stairs shall always be kept in sound and usable condition.

(*b*) All external stairs shall be directly connected to the ground.

(*c*) Entrance to the external stairs shall be separate and remote from the internal staircase.

(*d*) Where an external staircase is provided, it shall be ensured that the use of it at the time of fire is not prejudiced by smoke and flame from openings (for example, windows, doors) in the external face of the building. Care shall be taken to ensure that no external wall or window opening opens on to or close to an external stair. If such openings exists within 3 meters from an external staircase, they shall be protected with fire rated doors/window assemblies with rating of at least 60 minutes.

(*e*) The external stairs shall be constructed of non-combustible materials, and any doorway leading to it shall have minimum 120 minutes fire resistance.

(*f*)The light and ventilation for the staircase shall be provided from an external wall by providing openings of not less than 1/10th of the area of the staircase and such openings shall be provided at each landing stage. The openings shall have a fire rating of atleast 120 minutes.

(*g*) No external staircase flight of steps shall be inclined at an angle greater than 45 degrees from the horizontal.

(*h*) External stairs shall have straight flight not less than 1,500 mm wide.

(*i*) Handrails, to be provided on both sides, shall be of a height not less than 1,000 mm and not exceeding 1,200 mm. There shall be provisions of balusters with maximum gap of 150 mm.

(*V*) *Spiral Stairs:*— The use of spiral staircase shall be limited to low occupant load and to a building not exceeding 9 m in height. A spiral staircase shall be not less than 1,500 mm in diameter and shall be designated to give adequate headroom.

15.9.10. *Ramps:*— (*a*) In addition to the provisions contained in clause 6 of Part 4 of the National Building Code of India, 2016, ramps shall comply with all the applicable requirements for staircases regarding enclosure, capacity (see Table XXII as specified in regulation 15.9.5) and limiting dimensions.

(*b*) The slope of a ramp shall not exceed 1 in 12 (8 percent).

(*c*) Ramps shall be surfaced with approved slip resistant materials that are securely attached. No perforations are permissible on the ramp floors.

(*d*) Any changes in travel direction in ramp shall be preceded by landings of 1.5 meters x 1.5 meters size.

(*e*) Ramps and intermediate landings shall continue with no decrease in width along the direction of egress travel.

(*f*) Outside ramps and landings shall be designed to minimize water accumulation on their surfaces.

(*g*) Ramps shall have landings located at the top, at the bottom, and at doors opening onto the ramp.

(*h*) Every landing shall be not less than 1,500 mm long in the direction of travel.

(*i*) Where the ramp is not part of an accessible route, the ramp landings shall not be required to exceed 1,250 mm in the direction of travel, provided that the ramp has a straight run.

(*j*) Handrails shall be provided on all ramps on both sides (see regulation 15.9.9 (IV) (i)).

(*k*) The minimum width of vehicular ramp to basement shall be 3.60m wide, atleast two ramps shall be provided, located preferably at opposite ends and the maximum gradient of vehicular ramp shall be 1 in 8 (12.5%).

Note: Above requirements at (*a*) to (*j*) shall not be applicable to basement car parking ramps.

15.10. *Fixed Fire Fighting Installations.*— These shall be provided in all buildings depending upon the occupancy use and height in accordance with the provisions of clause 5 of Part 4 of the National Building Code of India, 2016.

15.11. *Miscellaneous.*— Wherever applicable, Lightning protection of buildings, Compartmentation, Smoke Control, and Additional Occupancy Wise Requirements shall be as per clause 3.4.6.5, 4.5, 4.6 and 6 of Part 4 of the National Building Code of India, 2016. Fire Requirements for Basement and Building Services shall be as per Annexure-III, 27.III. Lightning Protection shall be required for buildings specified in regulation 15.2.1 and also for buildings having Ground or Stilt + 2 floors or more, or for buildings having height 9 meters and above when measured from adjoining Ground. Lightning protection of building shall be installed to the satisfaction of the Electricity Department.".

9. *Substitution of regulation 16.*— For regulation 16 of the principal Regulations, the following regulation shall be substituted, namely:—

"16. *Facilities for the Persons with Disabilities and elderly persons.*—

16.1. All buildings and recreational spaces including beaches under the occupancies listed below at (*i*) to (*vii*) which have access to the public, shall be provided with facilities for persons with disabilities and elderly persons.

(*i*) Assembly Building.

(*ii*) Business/commercial/office building/ /mercantile building.

(*iii*) Educational buildings.

(*iv*) Industrial buildings (Arrangement for employees with disabilities are directly related to the type of work they perform. Arrangement for persons with disabilities need not be considered in heavy manufacturing Industry. Arrangement for all persons with disabilities should be incorporated into the design of new light manufacturing factories where persons with disabilities may be employed).

(*v*) Institutional buildings.

(*vi*) Residential buildings with 24 dwelling units and more or having 2,000 sq. mts. of built up area and more, at least 20% of the number of units shall comply with the space standards and facilities as per the Harmonised Guidelines and Space Standards for Barrier Free Built Environment for Persons with Disability and Elderly Persons.

(*vii*) Recreational (Playground, parks, gardens and beaches).

16.2. The above occupancies shall provide the following facilities, namely:—

(*1*) Every such building shall have easy access to the main entrance through a ramp with railing on both the sides as specified in clause (3).

(*2*) Every such building shall have a lift or separate approach through a ramp intended for persons with disabilities to each floor, provided that, the entrance door width for such lift shall not be less than 90 cm and its minimum size should be 1500 mm wide by 1500 mm deep; wherever possible 13 passenger lift to be provided, which allows easy maneuverability of wheel chair user, also the lift should have Braille marking on buttons inside and outside on the panels. It should have audio announcement, the lift should have railing on all three sides. In case lifts are provided with touch screen panel, there should be additional panel with physical button having Braille marking.

(*3*) The maximum gradient of any ramp approach intended for the persons with disabilities shall not exceed 1 in 12 (for details refer clause 7.2.2 of Harmonised Guidelines and Space Standards for Barrier Free Built Environment for Persons with Disability and Elderly Persons) and shall be finished with non-slippery material. The minimum clear width of ramp shall be 120 cm. and provided with handrails on both sides at 80 cm. height. The slope of all such ramps shall be constant within a building as far as possible. The ramp also should carry tactile tiles as prescribed in the said Harmonised guidelines.

(*4*) *Entrance Landing*: Entrance landing shall be provided adjacent to ramp with the minimum dimension 1800mm x 2000mm.

The entrance landing that adjoins the top end of a slope shall be provided with floor materials to attract the attention of visually impaired person's (limited to coloured floor material whose colour and brightness is conspicuously different from that of the surrounding floor material or the material that emits different sound to guide visually impaired persons. Finishes shall have a non-slip surface with a texture traversable by a wheel chair. Kerbs wherever provided should blend to a common level.

(5) *Corridor connecting the entrance/exit for persons with disabilities*:— The corridor connecting the entrance/exit for persons with disabilities leading directly outdoors to a place where information concerning the overall use of the specified building can be provided to visually impaired persons either by a person or by signs, shall be provided as follows:—

(*a*) Guiding floor materials' shall be provided or device that emits sound to guide visually impaired persons should be installed.

(*b*) The minimum width shall be 1500mm.

(*c*) In case there is a difference of level, slope ways shall be provided with maximum slope of 1:12.

(*d*) Handrails shall be provided for ramps/ slope ways on both the sides of stair-ways.

(6) Stair-ways:— One of the stair-ways– near the entrance/exit for the persons with disabilities shall have the following provisions:—

(*a*) The minimum width shall be 1350 mm.

(*b*) Height of the riser shall not be more than 150 mm and width of the tread 300mm. The steps shall not have abrupt (square) nosing.

(*c*) Maximum number of risers on a flight shall be limited to 12.

(*d*) Handrails shall be provided on both sides and shall extend 300 mm on the top and bottom of each flight of steps.

(7) *Toilets General*:

(7) (*a*) In all public buildings, one unisex accessible toilet should be provided in each toilet block in each floor. Apart from this all toilet blocks must have one cubicle suitable for use by persons with ambulatory disabilities.

Note: (*1*) For small office buildings where the floor area limits the provision of accessible washrooms/toilets on each floor, one unisex accessible washroom on ground level shall be provided to serve the entire building. The unisex accessible washroom/toilet should be located adjacent to an accessible elevator.

Note: (*2*) Where an office building is sub-divided among various tenants, unisex accessible washroom/toilet should be provided on each floor.

(7) (*b*) The unisex toilet should have:—

(*i*) The minimum size shall be 2200mm x 2000mm.

(*ii*) Minimum clear opening of the door shall be 900mm and the door shall open outward or have two way opening door or a sliding type with a sliding/horizontal pull bar at least 600mm long.

(*iii*) The layout of the fixtures in the toilet should be such that there is a clear maneuvering space of 1800mm x 1800mm in front of water closet and wash basin in the accessible toilet unit.

(*iv*) Centre of WC shall be located at a distance of 460mm to 480mm from the adjacent wall.

(*v*) There should be an adequate clear floor space of atleast 1350mm depth and 900mm width both in front and on the transfer side, adjacent to water closet.

(*vi*) Suitable arrangement of vertical/ horizontal handrails with atleast 50mm clearance from wall shall be made in toilet.

(*vii*) The top of WC seat shall be 450-480mm from the floor.

(*viii*) At least one sink (washbasin) in each floor shall have a knee room of 70 cms high under the sink and

(*ix*) Locks if any, of such toilet doors shall be of a type that can be opened from outside in case of emergency.

(*7*) (*c*) One special W. C. at each floor in a set of toilets shall be provided for the use of persons with disabilities with essential provision of washbasin near the entrance for the persons with disabilities.

(*i*) The minimum size shall be 900 x 2000 mm.

(*ii*) Minimum clear opening of the door shall be 900 mm and the door shall open outward or have two way opening door or a sliding type with a sliding/horizontal pull bar at least 600mm long.

(*iii*) Suitable arrangement of vertical/ /horizontal handrails with minimum 50mm clearance from wall shall be made in the toilet.

(*iv*) The top of W.C. seat shall be 450-480mm from the floor.

(*v*) At least one sink (washbasin) in each floor shall have a knee room of 70 cms high under the sink and 900mm width both in front and on the transfer side, adjacent to water closet.

(*vi*) Locks if any, of such toilet doors shall be of a type that can be opened from outside in case of emergency.

(*8*) *Parking facilities*:—

(*a*) Two accessible parking lot should be provided for every 25 car parking spaces or part thereof exclusively for persons with disabilities with maximum travel distance of 30 meters from the building entrance.

(*b*) The width of such parking bay shall be minimum of 3.6 meters.

Specific sign boards should be available for notifying reserve parking for persons with disabilities in all building structures/ recreational spaces specified in regulation 16.1.

(*9*) Walks and paths:—

(*a*) Walks shall be smooth with hard level surface suitable for walking and wheeling. Avoid grates and manholes in walks. If grates cannot be avoided, then bearing bar shall be perpendicular to the travel path and opening between bars shall not be greater than 12 mm. in width.

(*b*) The walkway shall not cross vehicular traffic.

(*10*) Other Special Treatments:—

(*a*) All obstructions and projections up to a minimum of 2.1 metre height from the finished floor level shall be avoided.

(*b*) Recoil doors shall be avoided, wherever there is access to the general public

(*c*) Appropriate signages shall be provided at salient locations for facilitating the persons with disabilities. Graphical and simple, prominent signage as per standard requirements of colour and contrast should be provided.

(*d*) In the buildings meant for the predominant use of the children, it will be necessary to suitably alter the height of the handrail and other fittings and fixture etc.

Note: Whatever not specifically specified in these regulations shall be as per Harmonised Guidelines and Space Standards for Barrier Free Environment for Persons with Disability and Elderly Persons as issued by the Government of India and as amended from time to time.".

10. *Substitution of Annexure-III.*— For Annexure-III of the principal regulations, the following Annexure shall be substituted, namely:—

"ANNEXURE-III

27.III.

1. *Lift*:— The requirements for lift shall be as per provisions of section 5 of Part 8 of the National Building Code of India, 2016.

2. *Fire Lift*:— The requirements for fire lift shall be as per provisions of section 5 of Part 8 of the National Building Code of India, 2016.

3. *Basement*:— As provided under Annexure-VI at 27.VI.

3.1 *Requirements*:— (*a*) Basement exits shall be sufficient to provide for the capacity of the basement as determined in accordance with

15.9.3. In no case there shall be less than two independent basement exits.

(*b*) Basements having incidental occupancies to main occupancy shall be planned with exit requirements of the basements for the actual occupancy within the basement.

(*c*) Where basement is used for car parking and also there is direct approach from any occupancy above to the basement, door openings leading to the basement shall need to be protected with fire doors with 120 min fire rating, except for exit discharge doors from the basement.

(*d*) The basement shall be partitioned and in no case compartment shall be more than 500 sq. m. and less than 50 sq. m. area except parking. Each compartment shall have ventilation standards as laiddown in Regulations separately and independently. The partition shall be made in consultation with the Director, Directorate of Fire and Emergency Services.

(*e*) The first basement (immediately below ground level) can be used for services/parking/ other permissible services. Lower basement, if provided, shall exclusively be used for car parking only.

(*f*) Each basement shall be separately ventilated. Vents with cross-sectional area (aggregate) not less than 2.5 percent of the floor area spread evenly round the perimeter of the basement shall be provided in the form of grills or breakable starboard lights or pavement lights or by way of shafts. Alternatively a system of air inlets shall be provided at basement floor level and smoke outlets at basement ceiling level. Inlets and extracts may be terminated at ground level with starboard or pavement lights as before. But ducts to convey fresh air to the basement floor level have to be laid. Starboard and pavement lights should be in positions easily accessible to the firemen and clearly marked "SMOKE OUTLET" or AIR INLET" with an indication of area served at or near the opening.

(*g*) The staircase of basement shall be of enclosed type having fire resistance of not less than two hours and shall be situated at the periphery of the basement to be entered at ground level only from the open air and in such positions that smoke from any fire in the basement shall not obstruct any exit serving the ground and upper storeys of the building and shall communicate with basement through a lobby provided with fire resisting self closing door of one hour rating. In case of basement being used as car parking only, the travel distance shall be 45 meters.

(*h*) In multi-storeyed basements, intake duct may serve all basements levels, but each basement and basement compartment shall have separate smoke outlet duct or ducts. Mechanical extractors for smoke venting system from lower basement levels shall also be provided. The system shall be of such design as to operate on actuation of smoke, heat sensitive detectors/ /sprinklers, if installed, and shall have a considerably superior performance compared to the standard units. It shall also have an arrangement to start it manually.

(*i*) Mechanical extractors shall have an internal locking arrangement so that extractors shall continue to operate and supply fans shall stop automatically with the actuation of fire detectors. Mechanical extractors shall be designed to permit 12 air changes per hour in case of fire or distress call. However, for normal operation, only 12 air changes or any other convenient factor can be maintained. (i) Mechanical extractors shall have an alternate source of power supply.

(*j*) Ventilating ducts shall be integrated with the structure and made out of brick masonry or RCC as far as possible and when this duct crosses the transformer area of electrical switchboard, fire dampers shall be provided.

(*k*) Kitchens working on gas fuel shall not be permitted in basement/sub-basement.

(*l*) If cutouts are provided from basement to the upper floors or to the atmosphere, all side cutout openings in the basements shall be protected by sprinkler heads at closed spacing so as to form a water curtain in the event of a fire.

(*m*) Dewatering pump shall be provided in all basements.

(*n*) Additional provisions shall apply to parking structures of the closed or open type, within buildings above or below grade as per Annex H of Part 4 of the National Building Code of India, 2016.

4. All high-rise buildings having height above 200 meters shall have provision for a Helipad on the terrace for specific requirements like landing of fire equipment and support facilities or other emergencies. The same shall be subject to approval of the Airport Authority and Structural Safety from Indian Institute of Technology/National Institute of Technology.

5. *Service Ducts/Refuse Chute*:— Service Ducts/ Refuse Chute shall be as per Clauses 3.4.5.4 and 3.4.5.5 of Part 4 of the National Building Code of India, 2016.

6. *Electrical Services*:— Electrical Services shall be as per Clause 3.4.6 to Clause 3.4.6.2 of Part 4 of the National Building Code of India.

7. *Staircase and Corridor Lights*:— The staircase and corridor lighting shall be as per Clause 3.4.7 to 3.4.7.2 of Part 4 of the National Building Code of India, 2016.

8. *Air-Conditioning*:— Air-conditioning shall be as per Clause 3.4.8 to 3.4.9 of Part 4 of the National Building Code of India, 2016.

9. *Fire Dampers*:— Fire Dampers shall be as per Clause 3.4.8.4 of Part 4 of the National Building Code of India, 2016.

10. *Boiler Rooms*:— Boiler Rooms shall be as per Clause 3.4.9.2 of Part 4 of the National Building Code of India, 2016.

11. *Alternate Source of Electric Supply*:— Alternate Source of Electric Supply shall be as per Clause 3.4.6.4 of Part 4 of the National Building Code of India, 2016.

12. *Safety Measures in Electric Sub-Station*:— Safety Measures in Electric Sub-Station shall be as per Clause 3.4.6.3 to 3.4.6.3.2 of Part 4 of the National Building Code of India, 2016.

13. *Control room*:— Control room/Fire Command Centre shall be as per Clause 3.4.12 of Part 4 of the National Building Code of India, 2016.".

11. *Amendment of Annexure-IV, 27.IV*.— The ANNEXURE-IV, 27.IV of the principal Regulations shall be omitted.

12. Amendment *of Annexure-VI, 27.VI.*— In Annexure VI, 27.VI of the principal Regulations in clause (2),—

(*i*) for sub-clause (*j*), the following clause, shall be substituted, namely,

"(*j*) Fire and Safety requirements as applicable to each basement floor shall be as per Annexure-III, regulation 27.III.";

(*ii*) sub-clause (*k*) shall be omitted.

13. *Amendment of Annexure-VII, 27.VII.*— In Annexure VII, 27.VII of the principal Regulations, in clause 7.3, in sub-clause (c), for the words "Chief Fire Officer", the expression "Director, Directorate of Fire and Emergency Services" shall be substituted.

14. Insertion of Sketches.— After Sketch No. 7 of the principal Regulations, the following sketches shall be inserted, namely:—

"Sketch No. 8. A Door Location at Landing in Fire Exits

(see Regulation 15.9.2 (h))

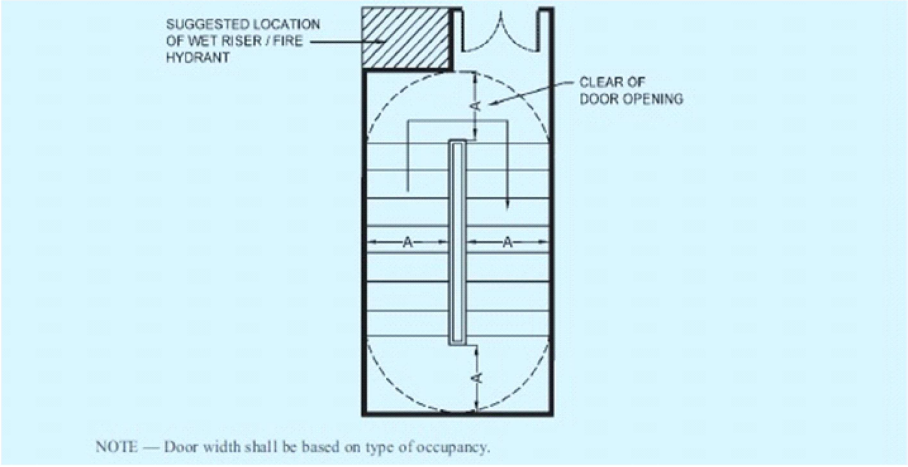

Minimum Required Unobstructed Clearance with Door Leaf Encroaching on Landing In Institutional and Assembly Buildings

Sketch No. 8B. Door location at Landing in Fire Exists (See Regulation 15.9.2 (h))

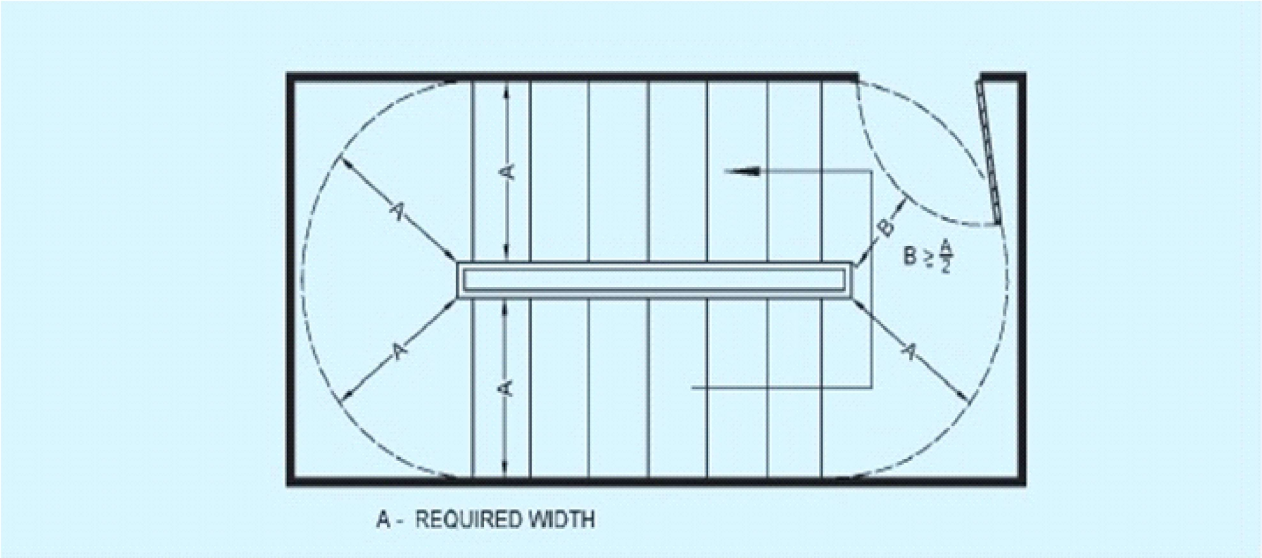

Minimum Required Unobstructed Clearance with Door Leaf Encroaching On Landing

Sketch No. 9. Minimum Head Room Measurement

(See Regulation 15.9.2 (j))

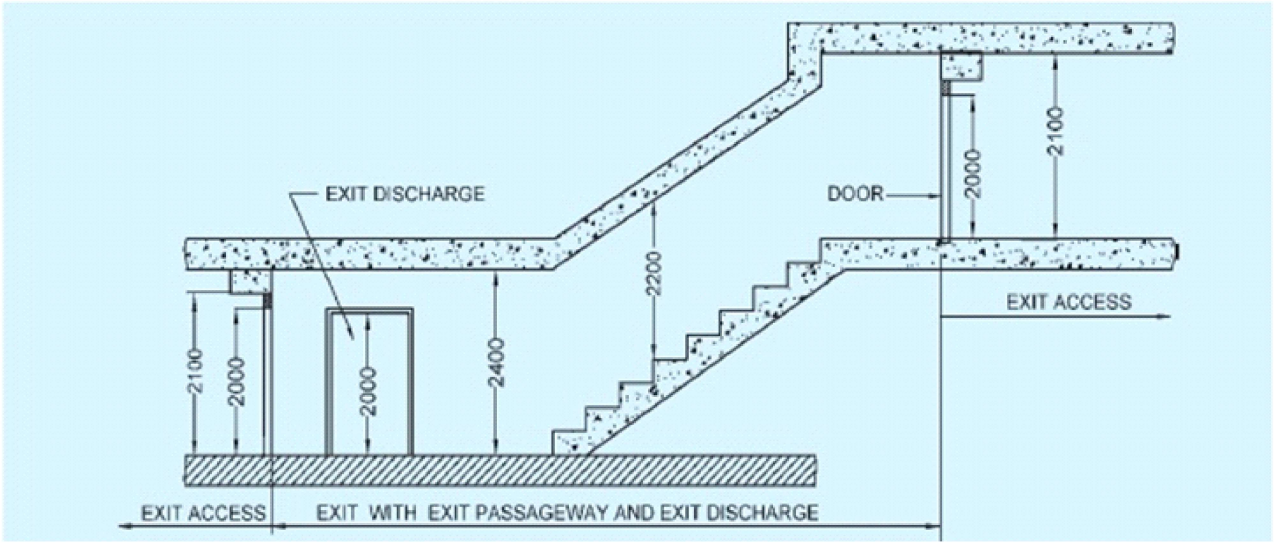

Sketch No. 10. Display Board Regarding Maximum Occupancy

(See Regulation 15.8.4)

MAXIMUM OCCUPANCY

____ PERSONS PERMITTED WITHIN THIS SPACE/ROOM

IT IS CONFIRMED THAT THE FIRE EXITS ARE PLANNED FOR EGRESS OF THE OCCUPANCY AS MENTIONED ABOVE AND OCCUPANCY MORE THAN THE ABOVE IS NOT PERMITTED IN THE SPACE/ROOM AS FOLLOWS:

SPACE/ROOM DETAIL: _____

FLOOR NO. _____

SIGN: _____ DATE: _____

(MANAGER/AUTHORIZED SIGNATORY)

Sketch No. 11. Dead End Corridor
(See Regulation 15.9.4 (c)

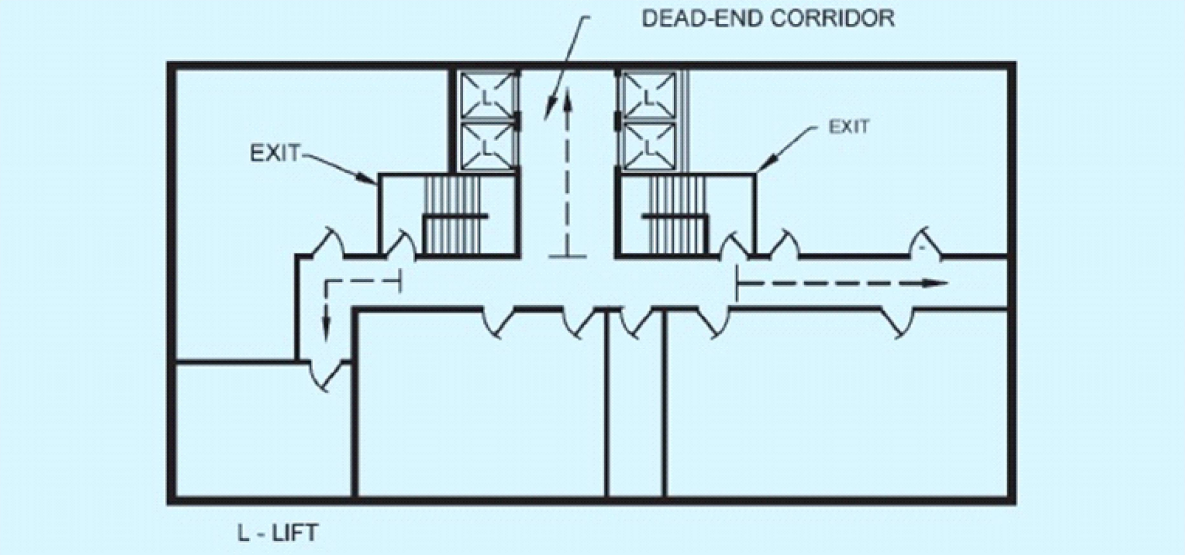

Sketch No. 12. Unacceptable Arrangement for Enclosing a
Stair Serving as Required Exit
(See Regulation 15.9.7 (a))

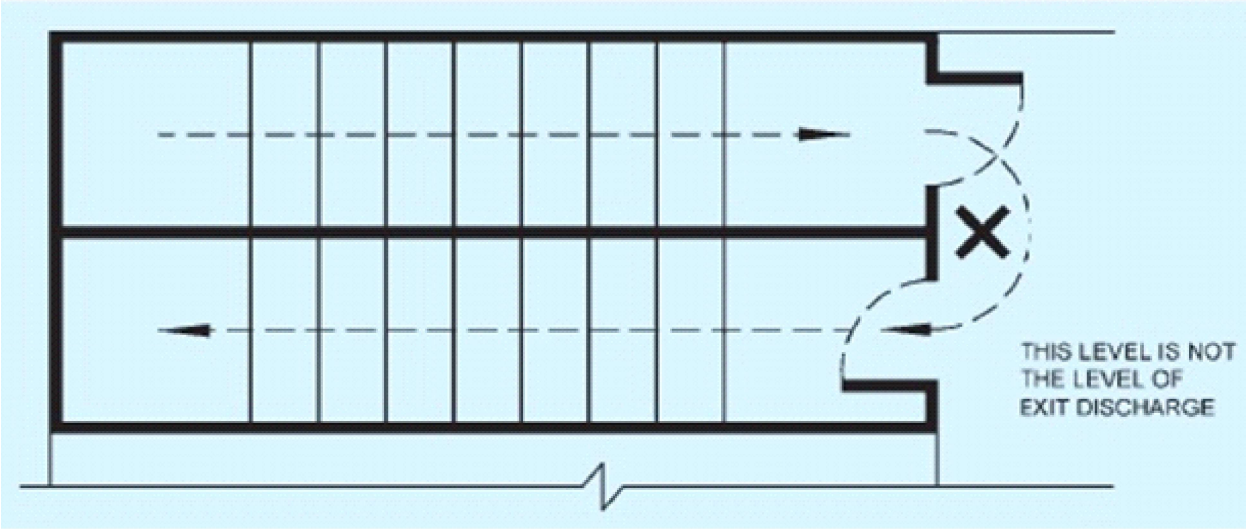

Sketch No. 13. Minimum Clear Door Width
(See Regulation 15.9.7 (b))

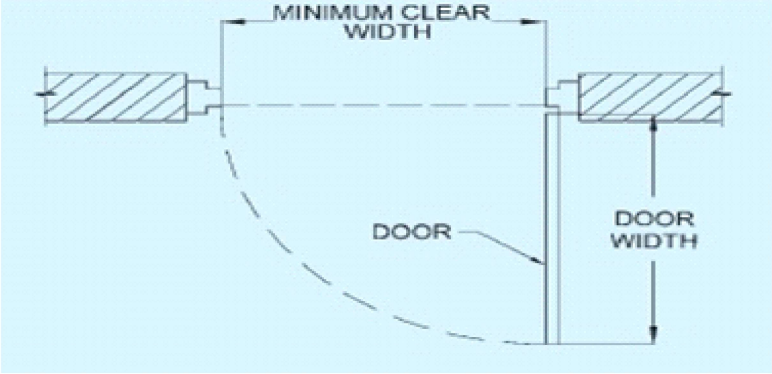

Sketch No. 14. Floor indication Board
(See Regulation 15.11)



14a. Example of a Stairway Marking Sign (Floor Indication Board)

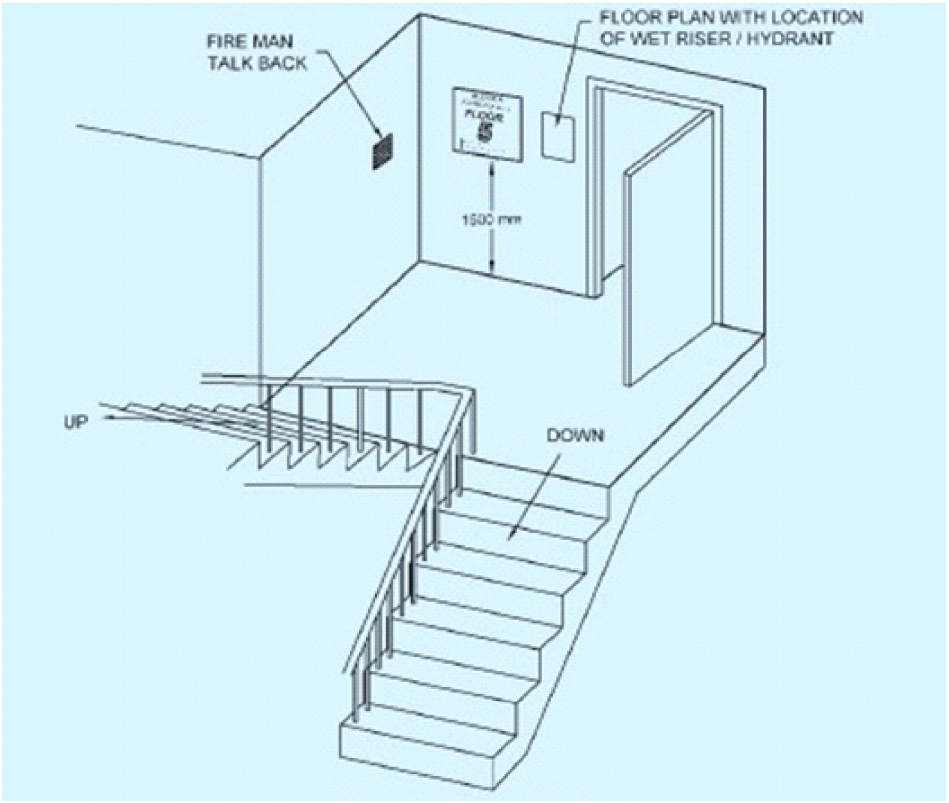

14b. Stair Sign Placement

By order and in the name of the Governor of Goa.

Vertika Dagur, Chief Town Planner (Land Use) & ex officio Joint Secretary.

Panaji, 09th August, 2023.

Notification

21/1/TCP/2021-23/Steering Committee/106

Whereas, the draft regulations, namely, the Goa Land Development and Building Construction (Amendment) Regulations, 2023 which the Government of Goa proposed to make in exercise of the powers conferred by sub-sections (*1*) and (*2*) of section 4 of the Goa (Regulation of Land Development and Building Construction) Act, 2008 (Goa Act 6 of 2008) (hereinafter referred to as the "said Act") so as to further amend the Goa Land Development and Building Construction Regulations, 2010, were pre-published as required by section 5 of the said Act vide the Government Notification No. 21/1/TCP(A)/2021/Steering Committee/675 dated 19-04-2023, published in the Official Gazette, Series I No. 4 dated 27-04-2023, read with Corrigendum No. 21/1/TCP(A)/2021/Steering Committee/747 dated 03-05-2023, published in the Official Gazette, Series I No. 5 dated 04-05-2023 inviting objections and suggestions from all persons likely to be affected thereby within 30 days from the date of publication of the said Notification in the Official Gazette;

And whereas, the said Notification and Corrigendum were published in the Official Gazettes and were made available to the public on 27-04-2023 and 04-05-2023, respectively;

And whereas, objections and suggestions received from the public on the said draft Regulations have been considered by the Sub-Committee appointed under sub-section (*2*) of section 6 of the said Act and submitted its report to the Steering Committee constituted under sub-section (*1*) of section 6 of the said Act vide the Government Notification No. 21/1/TCP/2018/SC/481 dated 22-02-2018, published in the Official Gazette, Series II No. 48 dated 01-03-2018;

And whereas, the Steering Committee after considering the report of the Sub-Committee submitted its report together with recommendation to the Government;

And whereas, the Government has considered the report and recommendations of the Steering Committee and approved the same and directed the Chief Town Planner (Land Use) to notify the Amendment Regulations in the Official Gazette.

Now, therefore, in exercise of the powers conferred by sub-sections (*1*) and (*2*) of section 4 of the Goa (Regulation of Land Development and Building Construction) Act, 2008 (Goa Act 6 of 2008) and all other powers enabling it in this behalf, the Government of Goa hereby makes the following regulations so as to further amend the Goa Land Development and Building Construction Regulations, 2010, namely:—

1. *Short title and commencement.*— (*1*) These regulations may be called the Goa Land Development and Building Construction (Amendment) Regulations, 2023.

(*2*) They shall come into force on the date of their publication in the Official Gazette.

2. *Amendment of regulation 2.*— In regulation 2 of the Goa Land Development and Building Construction Regulations, 2010 (hereinafter referred to as the "principal Regulations"),—

(*i*) in clause (52), after the word "established", the expression "and having work experience atleast for a period of two years under an Engineer/Structural Engineer registered with the Town and Country Planning Department or any local authority. This experience shall only be applicable to fresh pass out Graduate Engineers only who have completed their graduation within 05 years from the date of application for registration and also Experience certificate shall be to the satisfaction of the registering authority" shall be inserted;

(*ii*) in clause (*52A*), for the expression "3 years", the expression "5 years" shall be substituted;

(*iii*) in clause (*52B*), for the words "two years", the words "five years" shall be substituted.

3. *Amendment of regulation 6A.3.1.*— In regulation 6A.3.1 of the principal Regulations,—

(*i*) in clause (*e*), for the expression "housing", "10,000 sq. mts" and "2.50%" the expressions "accommodation for staff","5,000 m2" and "7.5%" shall be respectively substituted;

(*ii*) in clause (*i*),—

(*a*) the existing paragraphs shall be numbered as (*i*) and (*ii*) respectively and after the paragraphs so numbered, the following paragraphs shall be inserted, namely:—

"(*iii*) Uses such as Agricultural Research Centre/development centre/ Agricultural Educational Institute/ Educational Institute/Bio-Technology unit shall be permitted provided that the plot has minimum area of 2,00,000m2, the maximum Coverage, FAR and height of building permissible shall be 5%, 5% and 7.60m respectively.

(*iv*) Yoga or meditation centre shall be permitted provided that the plot has minimum area of 50,000m2, the maximum Coverage, FAR and height of building permissible shall be 5%, 5% and 7.60m respectively.";

(*b*) in paragraph (*ii*) as so numbered, for the word "dairy", the expression "dairy and processing units allied to agro products" shall be substituted.

4. *Amendment of regulation 6A.4.*— In regulation 6A.4 of the principal Regulations,—

(*i*) for the existing Note (4), the following note shall be substituted, namely:—

"(*4*) Farm houses within A1 and A2 zones shall be permitted within maximum permissible FAR and other parameters as provided in Annexure–XI, provided these lands are not classified as "rice" (Paddy field) in Survey Records and "forest".";

(*ii*) in Note (*16*), for the expression "Further, at the time of approval of development plans, minimum 6 meters wide right of way should be available on the site.", the expression "Notwithstanding minimum width of road in zones I-1 to I-3 and S-4/R-4 to S-1/R-1 specified in regulation 6A.4, TABLE-VIII, the minimum width of road requirements for buildings shall be as per ANNEXURE-XII" shall be substituted.

5. *Amendment of regulation 10.*— In regulation 10 of the principal Regulations, after clause (*e*), the following shall be inserted namely:—

"(*f*) All new and renovated non-residential buildings and other residential buildings, Co-operative Housing Societies and Colonies managed by Residents Welfare Associations (RWAs), with parking demarcated for more than 10 equivalent car spaces ('ECS') shall have atleast 20% of such 'ECS' to be made 'Electric Vehicle ready' ECS spots with conduits installed as per the GOA ELECTRIC MOBILITY PROMOTION POLICY – 2021 as amended from time to time.

Note: Independent house on single holding shall be exempted from the above regulation.".

6. *Amendment of regulation 12.4.*—In regulation 12.4 of the principal Regulations, for clause (d), the following clause shall be substituted, namely:—

"(*d*) The open spaces shall be used for recreational and community purposes of the occupants of the sub-divided plots and/ or for installations of public utilities, provided that such installations do not cover more than 5% of each of the open space or they may cover by combining the 5% of each of the various existing/proposed open space parcels within the existing/ /proposed sub-division layout and utilize

in one bigger parcel of the existing/ /proposed sub-division open space, a minimum of 3.00 metre setback from all edges of the plot is kept and the maximum height of any construction is restricted to 6.00 m only. In case of water tower, the height restriction will not be applicable.".

7. *Amendment of regulation 12.6.*— In regulation 12.6 of the principal Regulations, in clause (*b*), sub-clause (*iii*) shall be omitted.

8. *Amendment of regulation 12.7.*— In regulation 12.7 of the principal Regulations, in clause (*a*),—

(*i*) for sub-clause (*i*), the following sub-clause shall be substituted, namely:—

"(*i*) The owner shall be permitted to propose any of the following amenities in case of proposed sub-division as well as existing sub-division to be revised as per the requirement like schools, community centers, commercial centers, sports complexes, parking lots and charging stations, health clubs, hospital, nursing homes, dispensary, post office, police station, electrical sub-station, ATM of bank, library, open market, garbage bins/MRF, assisted living and hospice together, senior citizen housing and orphanage, project affected persons housing, water supply, electric supply installations and includes other utilities, services and conveniences.";

(*ii*) in sub-clause (*iii*) after the word "unchanged", the expression "except for amenities mentioned at (*i*) above.".

9. *Amendment of regulation 22.4. (a).*— In regulation 22.4. (a) of the principal Regulations,—

(*i*) the existing provision shall be numbered as clause (*a*);

(*ii*) after clause (*a*) so numbered and before the note the following clause shall be inserted, namely:—

"(*b*) Regularization of unauthorized construction having an area of more than 500 square metres, complying with these regulations and built before 31-12-2020 may be done on recommendation of Town and Country Planning Department or the Planning & Development Authority by verifying that the construction is carried out prior to the cutoff date i.e. 31-12-2020, period of construction shall be ascertained based on documents like electricity bill, water supply bill, tax receipts and other evidences. Compounding fee shall be six times the normal license fee for regularization of these structures.".

(*iii*) for the existing note, the following Note shall be substituted, namely:—

"Note: Regularization of constructions may be considered in the conservation zones, only with the recommendation of the Conservation Committee. Similarly, regularization in Coastal Regulation Zone can be considered only after obtaining approval from the Goa Coastal Zone Management Authority.".

10. *Amendment of regulation 22.5.*— In regulation 22.5 of the principal Regulations,—

(*i*) after the word "regularization", the expression ", whichever is higher" shall be inserted;

(*ii*) the following Note shall be inserted at the end, namely:—

"Note: In case of increase in height of buildings upto 5% or overall shift of position of the building without reducing the setback requirements by more than 5% and there is no increase in additional floor area and is complying with regulation 13.1(*b*) then the levy of compounding fee/charges as mentioned above shall not be applicable.".

11. *Substitution of Annexure-XI.*— In Annexure–XI of the principal Regulations,—

(*i*) in clause 2, for the expression "5% subject to a maximum of 500m2 per holding. The maximum area permissible for a farm house irrespective of the area of plot will be 500m2.", the expression "10% subject to a maximum built up area of

1000m2 per holding. The maximum built up area permissible for a farm house irrespective of the area of plot will be 1000m2 or 10% Coverage whichever is lower." shall be substituted;

(*ii*) in clause 3, for the figure "5", the figures "10" shall be substituted.

12. *Substitution of Annexure-XII.*— For Annexure–XII appended to the principal Regulations, the following annexure shall be substituted, namely:—

"ANNEXURE – XII

27. XII

The requirement of minimum width of road for various residential buildings, commercial buildings (Resort/hotels) and Industrial buildings with restrictions shall be as follows:

Minimum width of road and extent of units/floor area in respect of residential buildings

Minimum width of existing road required in meters.**	No. of units	Total Maximum floor area of entire/ /all building
3 mts. or more, but public road	1 (single dwelling)	500 m2
PUBLIC ROADS		
> 3 upto 4 mts.	2 units	400 m2
> 4 upto 5 mts.	4 units	600 m2
> 5 upto 6 mts.	8 units	1000 m2
6 mts. or greater	180 units	20,000 m2
8 mts. or greater	More than 180 units	> 20,000 m2

** The project proponents shall leave the road widening area as prescribed in the Regional Plan/Outline Development Plan, and other roads not less than 6.0 mts. Most restrictive criteria among No. of units and floor area shall be considered for fixing the minimum width of access.

Minimum width of road and extent of rooms/floor area in respect of Resorts/hotel buildings

(1)	(2)	(3)	(4)	(5)
Sl. No.	Type of Occupancy	Total floor area of the building in sq. mts.	Number of rooms	**Minimum width of existing road required in meters.
1	Resorts/Hotel	Up to 2000	40	6
		Above 2000	More than 40	8

** The project proponents shall leave the road widening area as prescribed in the Regional Plan/Outline Development Plan and the Resorts/Hotels shall be allowed on proposed road widths of atleast 8.0 mts. Most restrictive criteria among No. of rooms and floor area shall be considered for fixing the minimum width of access.

Minimum width of access and extent of floor area and number of storeys in respect of Industrial buildings

Sl. No.	Type of Occupancy	Total floor area of the building in sq. mts.	Number of storeys	**Minimum width of existing road required in meters
(1)	Small Industry	1000	2	6
(2)	Small Industry	2000	2	8
(3)	others	Any area	As per permissible height in Regulations	10

** The project proponents shall leave the road widening area as prescribed in the Regional Plan/ Outline Development Plan and small industry buildings shall be allowed on proposed road widths of atleast 10.0 mts. Most restrictive criteria among number of storeys and floor area shall be considered for fixing the minimum width of access.

Note: Small scale industrial unit means an industrial unit carrying on small scale industry classified by Government from time to time for this purpose, but does not include an industry included in first schedule of the Factories Act, 1948.".

By order and in the name of the Governor of Goa.

Vertika Dagur, Chief Town Planner (Land Use) & ex officio Joint Secretary.

Panaji, 9th August, 2023.

———

Notification

21/1/TCP/2021-23/Steering Committee/107

In exercise of the powers conferred by sub-sections (*1*) and (*2*) of section 4 read with sub-section (*1*) of section 5 of the Goa (Regulation of Land Development and Building Construction) Act, 2008 (Goa Act 6 of 2008) and all other powers enabling it in this behalf, the Government of Goa hereby makes the following regulations so as to further amend the Goa Land Development and Building Construction Regulations, 2010, namely:—

1. *Short title and commencement.*— (*1*) These regulations may be called the Goa Land Development and Building Construction (Amendment) Regulations, 2023.

(*2*) They shall come into force on the date of their publication in the Official Gazette.

2. *Amendment of regulation 4.11.*— In regulation 4.11 of the Goa Land Development and Building Construction Regulations, 2010 (hereinafter referred to as the principal Regulations), in clause (*d*), for the expression "Authority/Council/Panchayat", the expression "Authority/ Council/Panchayat/Town and Country Planning Department" shall be substituted.

3. *Amendment of regulation 6.1.1.*— In regulation 6.1.1 of the principal Regulations, in clause (*a*),—

(*i*) in the TABLE-V, the following entries shall be omitted, namely:—

"VP1	Area 4000m2 & above	60	As per S2/R2
VP2	Area 4000m2 & above	50	9.00 mts. including stilt";

(*ii*) the existing note shall be numbered as (*1*) and after the note (*1*) so numbered, the following note shall be inserted, namely:—

"(*2*) The Government on recommendation of the Town and Country Planning Board shall grant additional height and FAR to the proposals on case to case basis in consideration of the locational aspect, nature of development, use proposed, information available and on any such other criteria, if required. Such relaxation shall however not be relaxed for more than 20% permitted in the prevailing Regulations.".

4. *Amendment of regulation 6A.4.*— In regulation 6A.4 of the principal Regulations,—

(*i*) in the TABLE – VIII,—

(*a*) for the entry "SPR (Special Residential) 24.00m",	10.00m	40%	200	3.00m
the entry "SPR (Special Residential) 28.00m"	10.00m	40%	200	3.00m

shall be substituted;

(*b*) for the entry "CS 10.00m 40% 250 10.00m 28.00m", the entry "CS 10.00m 40% 250 10.00m 32.00m" shall be substituted;

(*c*) for the entry "SPC (Special Commercial) 10.00m 40% 300 10.00m 32.00m", the entry "SPC (Special Commercial) 10.00m 40% 300 10.00m 40.00m" shall be substituted;

(*ii*) in the existing Note (*20*),—

(*a*) for the figures "20%", the figures "30%" shall be substituted;

(*b*) after the expression "Annexure XIII", the expression "No additional FAR, if provided under any other regulations shall be applicable/availed by the project proponent, whoever has availed of this 30% FAR, other than which is already available under floor area" shall be inserted;

(*iii*) after Note (*26*), the following notes shall be inserted, namely:—

"(*27*) Permissions/clearances in zones SPR (Special Residential), CS and SPC (Special Commercial) shall be subject to approval of the Government and fulfillment of the requirement of fire safety by Directorate of Fire and Emergency Services.

(*28*) Incentives for Indian Green Building Council (IGBC) Certified Green Building: An additional FAR of 10% may be granted with the approval of the Government, for Green Building projects which will be pre-certified/provisionally certified by IGBC. All such project proponents availing this additional FAR shall be issued Completion Certificate with the approval of the Government post certification by IGBC and this IGBC Certification shall be renewed every 5 years by IGBC.".

5. *Amendment of regulation 12.8.*— The regulation 12.8 of the principal Regulations shall be omitted.

6. *Insertion of regulation 14.3.4.*— After regulation 14.3.3 of the principal Regulations, the following regulation shall be inserted, namely:—

"**14.3.4. In Building Solutions for Common Telecommunication Infrastructure (CTI)**:

A. *Multi dwelling units, commercial complexes, public buildings and Transport facilities:*

1. New building constructions shall have to properly demarcate section (area) within buildings and on roof tops for installing broadband/digital connectivity infrastructure/antenna. These areas should have access to power supply for reliable, un-interrupted services.

2. Provisions of In-building Solutions (IBS) components in building premises:

(*a*) *Entrance facilities (EF)/lead-in conduits*: Minimum 1.2m x 1.83m space to be allocated for each Telecom Service provider adjacent to the EF, if a separate space is required for service providers.

Underground conduits/pipes to Main Distribution Frame room shall be through min 100 mm dia encased conduits.

(*b*) *Main Distribution Frame (MDF)/Equipment Room*: The minimum recommended size for ER is 14m2 with L:W ratio between 1:1 to 2:1, with proper lighting for vision of equipments and ventilation of room. This room shall be located at a level above from the Natural Ground Level to avoid incidence of flooding. Necessary Electric distribution panels, isolaters, sockets and earthing shall be provided as per specific requirements.

(*c*) *Telecommunications Room (TR)*: at each building block unless provided with MDF Room with appropriate numbers and size (length x width) of Service/Telecom risers (vertical shafts) for all multi-storeyed buildings w.r.t. the area proposed for Coverage (DUs/service subscribers) with access door at each floor.

(*d*) *Telecommunications Enclosures (TE)*: at each floor of a block or TR.

(*e*) (*i*) Telecom room space norm for buildings with built-up area (floor space) greater than 465 sq. mts.

Sl.No.	Area* to be covered by IBS	Size of Telecom Room (all dimension in m)
1	Upto 465 sqmt	3.0 x 2.4
2	465.0 sqmt to 930.0 sqmt	3.0 x 3.4
3	More than 930.0 sqmt	Additional TR required with same space rooms

* usable floor space to be served.

(*ii*) Space requirements for smaller buildings with built-up area less than 465 sq. mts.

Sl.No.	Area to be covered by IBS	Space provisions (all dimensions in m)
1	Upto 93.0 sqmt	Wall cabinets, self-contained enclosed cabinets
2	93.0 sqmt to 465.0 sqmt	Shallow Room (0.6 x 2.6) Walk-in Room (1.3 x 1.3)

3. For the purpose of floor area calculation, the above said room area(s) of IBS components in building premises shall be exempted as per sub regulation (*63*) (*k*) of regulation 2.

4. Occupancy certificate/Completion Order to a building shall be granted only after ensuring that an undertaking is given by the Architect or Engineer or other professional who is competent to submit application for issue of completion order/occupancy certificate under GLDBCR-2010 certifying that building has ensured common access to all digital infrastructure to all service provider at building level and in-building components are in accordance with plan of creation of CTI.

B. At layout level (sub-division): (*1*) Layout plans should clearly indicate the telecom as utility infrastructure lines. Telecommunication cables should be placed in a duct/pipe that can be accessed at frequent service points with sufficient spare capacity to enable scaling and future expansion and empty popes (large size hume popes/HDPE pipes) should be laid before planting trees in order to accommodate additional infrastructure.

(*2*) Telecommunication cables should ideally be placed below the parking area or service lane. Where this is not possible, the cables may be placed at the outer edge of the right-of-way. Telecom boxes if required, should be placed after leaving 2m space for pedestrian path (foot path).

(*3*) Final NOC for sub-division shall be granted after ensuing that an undertaking is given by the Architect or Engineer or other Professional who is competent to submit application for issue of NOC for sub-division under GLDBCR-2010 certifying that the layout has all the Telecommunication cables to service provider in accordance with plan of CTI.

(*4*) For any other necessary detailing of building components and service installations with respect to common Telecom/Digital Connectivity Infrastructure architects/engineers/planners/ /other professionals may be advised to refer the above said Addendum to Model Building

Bye-laws/Part 8–Section 6: Information and Communication Enabled Installations of Volume 2 of the National Building Code, 2016".

7. *Amendment of Annexure–XIII.*— In Annexure–XIII of the principal Regulations, for the figures "20%, wherever they occur, the figures "30%" shall be substituted.

By order and in the name of the Governor of Goa.

Vertika Dagur, Chief Town Planner (Land Use) & ex officio Joint Secretary.

Panaji, 9th August, 2023.

www.goaprintingpress.gov.in

Printed and Published by the Director, Printing & Stationery,
Government Printing Press,
Mahatma Gandhi Road, Panaji-Goa 403 001.

PRICE – Rs. 27.00

PRINTED AT THE GOVERNMENT PRINTING PRESS, PANAJI-GOA—171/120—8/2023.

(*5*) In case of employees employed on piece-rate basis, the minimum rates of wages payable shall be at the rate not less than the minimum rates revised under this Notification.

(*6*) The monthly rate of minimum wages payable to an employee employed in any category, in respect of which, daily rate of minimum wages is revised, shall be computed by multiplying the daily rate by 26.

(*7*) The minimum rates of wages include the wages for weekly day of rest.

By order and in the name of the Governor of Goa.

Vivek Naik, Under Secretary (Labour).

Porvorim, 10th August, 2023.

———————

Department of Town & Country Planning

———

Corrigendum

21/1/TCP/2021-23/Steering Committee/113

In the Government Notification No. 21/1/TCP/2021-23/Steering Committee/106 dated 09-08-2023 of the Department of Town and Country Planning, published in the Official Gazette, Extraordinary No. 2, Series I No. 18, dated 09-08-2023, on page No. 1753, in regulation 11 of the Goa Land Development and Building Construction (Amendment) Regulations, 2023,—

(*i*) the expression "1000 m2 or 10% Coverage whichever is lower" shall be read as "1000 m2";

(*ii*) the expression "the figures "10" " shall be read as "the expression "10 where area of plot exceeds 10,000 m2 with maximum built-up area of 1,000 m2" ".

Vertika Dagur, Chief Town Planner (Land Use) & ex officio Joint Secretary.

Panaji, 11th August, 2023.

www.goaprintingpress.gov.in

Printed and Published by the Director, Printing & Stationery,
Government Printing Press,
Mahatma Gandhi Road, Panaji-Goa 403 001.

PRICE – Rs. 68.00

PRINTED AT THE GOVERNMENT PRINTING PRESS, PANAJI-GOA—175/100—8/2023.

Department of Town and Country Planning

Office of the Chief Town Planner (Land Use)

—

Corrigendum

21/1/TCP/2021-23/Steering Committee/119

In the Government Notification No. 21/1/ /TCP/2021-23/Steering Committee/107 dated 09-08-2023 of the Department of Town and Country Planning, published in the Official Gazette, Extraordinary No. 2, Series I No. 18 dated 09-08-2023 on page 1754, in regulation 3 of the Goa Land Development and Building Construction Regulations, 2023, the expression "The Government on recommendation of the Town and Country Planning Board shall grant additional height and FAR to the proposals on case to case basis in consideration of the locational aspect, nature of development, use proposed, information available and on any such other criteria, if required. Such relaxation shall however not be relaxed for more than 20% permitted in the prevailing Regulations." shall be read as "The Government on recommendation of the Town and Country Planning Board shall grant additional height and FAR to the proposals on case to case basis in consideration of the locational aspect, nature of development, use proposed, information available and on any such other criteria, if required.".

Vertika Dagur, Chief Town Planner (Land Use) & ex officio Joint Secretary.

Panaji, 21st August, 2023.

www.goaprintingpress.gov.in

Printed and Published by the Director, Printing & Stationery,
Government Printing Press,
Mahatma Gandhi Road, Panaji-Goa 403 001.

PRICE – Rs. 2.00

PRINTED AT THE GOVERNMENT PRINTING PRESS, PANAJI-GOA—187/100—08/2023.